Symmetrical Component Decomposition of DC Distribution Systems

van der Blij, Nils H.; Ramirez-Elizondo, Laura M.; Spaan, Matthijs T.J.; Bauer, Pavol

DOI
10.1109/TPWRS.2017.2749141

Publication date
2018

Document Version
Accepted author manuscript

Published in
IEEE Transactions on Power Systems

Symmetrical Component Decomposition of DC Distribution Systems

Nils H. van der Blij, *Student Member, IEEE,* Laura M. Ramirez-Elizondo, *Member, IEEE,* Matthijs T. J. Spaan, *Member, IEEE,* and Pavol Bauer, *Senior Member, IEEE*

***Abstract*—Employing bipolar dc distribution systems introduces the possibility of imbalance in the system. To analyze these systems it is important to create novel modelling techniques. Therefore, this paper presents a method to decompose dc distribution systems into symmetrical components. The presented method simplifies the analysis of balanced, unbalanced, and fault conditions of bipolar dc distribution systems. Furthermore, equivalent circuits for several network components in the symmetrical domain are derived and are shown to be independent under symmetrical conditions. Additionally, a dynamic analysis is performed in the symmetrical domain showing that the method simplifies the analysis of dc distribution systems. Finally, the symmetrical domain equivalent circuits of several fault conditions are derived.**

***Index Terms*—bipolar grid, dc distribution grid, dynamic analysis, fault analysis, modelling, symmetrical components.**

I. Introduction

The increasing presence of distributed energy sources poses a serious challenge to present-day distribution grids [1]. Because ac voltages were easily transformed to higher voltage levels, ac distribution systems have been the norm since the late 19th century [2], [3]. However, technological advances and societal concerns indicate that a reevaluation of the current distribution system is timely. Technological advances include more efficient electronic converters, renewable energy generation and energy storage systems. Societal concerns include global warming, aging of the current power system infrastructure and depleting energy resources [4].

Nowadays dc distribution systems are foreseen to have advantages over ac in terms of efficiency, distribution lines, control and converters [5], [6]. These advantages can mostly be attributed to the absence of frequency and reactive power in dc systems. However, the broad adoption of dc distribution systems still faces several challenges. For example, further efforts are required to overcome the market inertia of ac systems and standardize dc distribution systems. Furthermore, additional research on protection and control is vital for the adoption of dc systems. The goal of this paper is to present a method to simplify the analysis of (control and protection in) balanced and unbalanced dc distribution systems.

Bipolar grids are becoming the norm for dc grids. The main advantages of bipolar grids are the relatively low voltage rating of the lines, flexibility and redundancy [7], [8]. However, since bipolar systems have multiple phase conductors there is a possibility of imbalance. If the current flowing in the positive pole is not exactly opposite to the current flowing in the negative pole, a current will flow in the neutral conductor. Consequently, a neutral conductor will be required as it is generally not allowed for the neutral current to flow through ground because this causes corrosion [9].

Previous work presented several approaches for modelling dc distribution grids. Firstly, the dc distribution grids can be modelled by their transfer functions [10], [11]. Secondly, a state-space approach can be used to model dc distribution grids [12], [13]. Lastly, transient modelling approaches can be used [14], [15]. In ac distribution systems the symmetrical component decomposition method has become a typical tool to simplify the analysis of complex power networks [16]. The symmetrical component decomposition method simplifies the analysis of (un)balanced systems, and short circuit or ground faults. Therefore, it is compelling to see if a similar technique can be applied to dc distribution grids.

Y. Gu *et al.* decomposed the dc distribution grid into a common mode and a differential mode [17], [18]. However, the transformation inherently only takes the positive and negative pole quantities into account. Therefore, the neutral is neglected unless additional assumptions are made. Furthermore, the voltages taken for the transformation are the voltages of the poles with respect to the neutral. As a result, the information of the neutral voltage, and therefore the voltages of the poles with respect to ground, is lost in the transformation. Consequently, no capacitance or conductance to ground can be taken into account and the analysis of ground faults becomes problematic.

The contribution of this paper is an improved method to decompose bipolar dc distribution systems into symmetrical components. The improved method inherently includes the neutral quantities, capacitance and conductance to ground, and allows for ground fault analysis. Furthermore, a generalized method is presented to transform network components to the symmetrical domain. The decomposition method is determined to significantly simplify the dynamic analysis of dc distribution systems by using simulations in both the symmetrical and original pole domain. Additionally, several equivalent circuits in the symmetrical domain of various (a)symmetrical faults are derived and presented.

This paper is organized as follows: in Section II a background of the symmetrical decomposition method for ac and dc distribution systems is provided. In Section III the

This project has received funding in the framework of the joint programming initiative ERA-Net Smart Grids Plus, with support from the European Union's Horizon 2020 research and innovation programme.

The authors are with Delft University of Technology, The Netherlands (e-mail: n.h.vanderblij@tudelft.nl; l.m.ramirezelizondo@tudelft.nl; m.t.j.spaan@tudelft.nl; p.bauer@tudelft.nl).

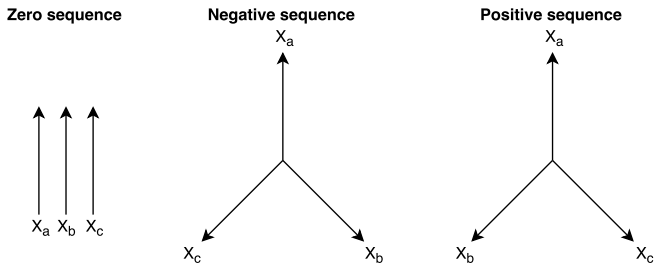

Fig. 1. Symmetrical component decomposition of ac systems

improved symmetrical component decomposition method for bipolar dc systems is presented. Subsequently, in Section IV an illustrative dynamic analysis is done in the symmetrical domain. The equivalent circuits in the symmetrical domain of several faults are discussed in Section V. Lastly, in Section VI conclusions are drawn.

II. Background of the Symmetrical Component Decomposition Method

The symmetrical component decomposition method is often used to simplify the analysis of (un)balanced systems, short circuits and ground faults. In this section the background of this method for ac and dc distribution systems is discussed.

A. Symmetrical Component Decomposition of AC Systems

Any asymmetrical set of N co-planar vectors can be represented by a symmetrical set of N vectors [19]. As a result, three phase ac systems are commonly decomposed into their zero sequence, negative sequence and positive sequence according to

$$\begin{bmatrix} X_0 \\ X_1 \\ X_2 \end{bmatrix} = \frac{1}{3} \begin{bmatrix} 1 & 1 & 1 \\ 1 & \alpha & \alpha^2 \\ 1 & \alpha^2 & \alpha \end{bmatrix} \begin{bmatrix} X_a \\ X_b \\ X_c \end{bmatrix}, \tag{1}$$

$$\alpha = e^{j2\pi/3}, \tag{2}$$

where X is any quantity (e.g., current or voltage).

Firstly, the positive sequence (X_2) represents a system of 3 phases of equal magnitude that are displaced 120 degrees with respect to each other. Secondly, the negative sequence (X_1) represents a system of 3 phases that are perfectly displaced 120 degrees in the opposite (phase) direction. Lastly, the 3 phases of the zero sequence (X_0) are equal in magnitude and are in phase. This is shown schematically in Fig. 1.

B. Solidly Grounded Bipolar DC Systems

Solidly grounded bipolar dc systems, although very different from the ac systems, can be seen as 2 phase systems, where the positive and negative poles are the phases. This potentially asymmetrical system can therefore be decomposed in a symmetrical set of 2 vectors.

The symmetrical set of vectors contains one vector that represents the balanced component of the system, the differential mode, and one vector that represents the unbalanced component of the system, the common mode [17], [18]. By

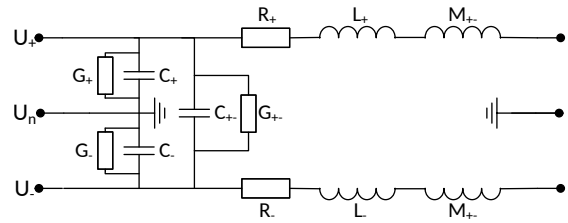

Fig. 2. Lumped element model of a solidly grounded bipolar distribution line

choosing $\alpha = e^{j\pi}$, this system can be decomposed into symmetrical components utilizing

$$\begin{bmatrix} X_1 \\ X_2 \end{bmatrix} = \boldsymbol{A} \begin{bmatrix} X_+ \\ X_- \end{bmatrix}, \tag{3}$$

$$\boldsymbol{A} = \frac{1}{2} \begin{bmatrix} 1 & 1 \\ 1 & -1 \end{bmatrix}, \tag{4}$$

where X_1 and X_2 are the unbalanced and balanced symmetrical components respectively, while X_+ and X_- are the positive and negative pole quantities respectively [17], [18].

The inverse symmetrical components transformation is given by

$$\begin{bmatrix} X_+ \\ X_- \end{bmatrix} = \boldsymbol{A}^{-1} \begin{bmatrix} X_1 \\ X_2 \end{bmatrix}, \tag{5}$$

$$\boldsymbol{A}^{-1} = \begin{bmatrix} 1 & 1 \\ 1 & -1 \end{bmatrix}. \tag{6}$$

III. Symmetrical Component Decomposition Method for Any Bipolar DC System

In this paper a generalized transformation is derived for the method described in the previous section. Furthermore, the transformation matrix is modified so that the neutral conductor quantities are inherently included and capacitance and conductance to ground can be taken into account.

A. Generalized Transformation Method

A distribution line model of a solidly grounded bipolar system is given in Fig. 2 as an example. The series resistance ($\boldsymbol{R}_\pm$) and inductance ($\boldsymbol{L}_\pm$), and shunt capacitance ($\boldsymbol{C}_\pm$) and conductance ($\boldsymbol{G}_\pm$) matrices of this model are

$$\begin{aligned} \boldsymbol{R}_\pm &= \begin{bmatrix} R_+ & 0 \\ 0 & R_- \end{bmatrix}, \\ \boldsymbol{L}_\pm &= \begin{bmatrix} L_+ & M_{+-} \\ M_{+-} & L_- \end{bmatrix}, \\ \boldsymbol{C}_\pm &= \begin{bmatrix} C_+ + C_{+-} & -C_{+-} \\ -C_{+-} & C_- + C_{+-} \end{bmatrix}, \\ \boldsymbol{G}_\pm &= \begin{bmatrix} G_+ + G_{+-} & -G_{+-} \\ -G_{+-} & G_- + G_{+-} \end{bmatrix}, \end{aligned} \tag{7}$$

where the diagonal elements in the series matrices arise from voltage drops caused by the current in that phase conductor and the diagonal elements originate from voltage drops caused by currents in other phase conductors (e.g., via mutual inductance). The diagonal elements of the shunt matrices stem from the sum of the connected components through which current

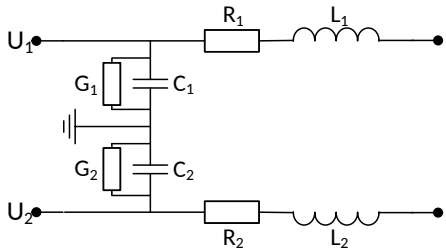

Fig. 3. Equivalent circuit of the solidly grounded bipolar distribution line model in the symmetrical domain

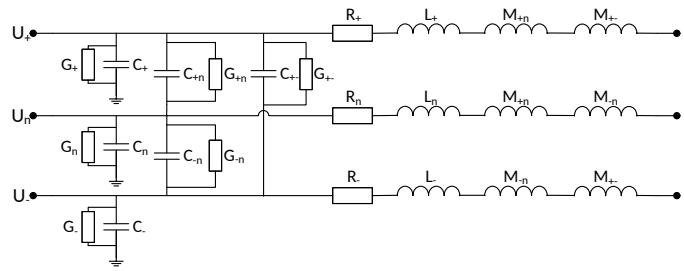

Fig. 4. Lumped element model of a bipolar distribution line with a metallic return

is leaked and the diagonal elements indicate to where these components are connected.

For the distribution lines the resistance is characterized according to the voltage drop over the distribution line:

$$\boldsymbol{U}' = \boldsymbol{R}\boldsymbol{I}, \tag{8}$$

where $\boldsymbol{U}'$ is the voltage drop over the transmission line.

The step by step derivation of the resistance matrix in the symmetrical domain is

$$\boldsymbol{A}^{-1}\boldsymbol{U}'_{12} = \boldsymbol{R}_{\pm}\boldsymbol{A}^{-1}\boldsymbol{I}_{12}, \tag{9}$$
$$\boldsymbol{U}'_{12} = \boldsymbol{A}\boldsymbol{R}_{\pm}\boldsymbol{A}^{-1}\boldsymbol{I}_{12}, \tag{10}$$
$$\boldsymbol{R}_{12} = \boldsymbol{A}\boldsymbol{R}_{\pm}\boldsymbol{A}^{-1}, \tag{11}$$

where the $\pm$ subscript indicates the original pole domain and the 12 subscript indicates the symmetrical domain. In a similar fashion the inductance, capacitance and conductance matrices in the symmetrical domain are derived to be

$$\boldsymbol{L}_{12} = \boldsymbol{A}\boldsymbol{L}_{\pm}\boldsymbol{A}^{-1}, \tag{12}$$
$$\boldsymbol{C}_{12} = \boldsymbol{A}\boldsymbol{C}_{\pm}\boldsymbol{A}^{-1}, \tag{13}$$
$$\boldsymbol{G}_{12} = \boldsymbol{A}\boldsymbol{G}_{\pm}\boldsymbol{A}^{-1}. \tag{14}$$

Equations (11) to (14) are used to compute the system's matrices in the symmetrical domain. The matrices in the symmetrical domain of the line shown in Fig. 2, given that the distribution lines are symmetrical (e.g., $R_+ = R_-$, $L_+ = L_-$, $C_+ = C_-$ and $G_+ = G_-$), are

$$\begin{aligned}
\boldsymbol{R}_{12} &= \begin{bmatrix} R_+ & 0 \\ 0 & R_+ \end{bmatrix}, \\
\boldsymbol{L}_{12} &= \begin{bmatrix} L_+ + M_{+-} & 0 \\ 0 & L_+ - M_{+-} \end{bmatrix}, \\
\boldsymbol{C}_{12} &= \begin{bmatrix} C_+ & 0 \\ 0 & C_+ + 2C_{+-} \end{bmatrix}, \\
\boldsymbol{G}_{12} &= \begin{bmatrix} G_+ & 0 \\ 0 & G_+ + 2G_{+-} \end{bmatrix}.
\end{aligned} \tag{15}$$

From (15) it is seen that the currents and voltages in the symmetrical domain are independent. Independent means that no (mutual) coupling occurs between the two components. The independence of the symmetrical domain circuit is further illustrated by the equivalent circuit in Fig. 3.

B. Transformation for Systems with a Metallic Return

In the previous section it is assumed that the neutral current passes through ground. However, this is usually not allowed as this causes corrosion. Therefore, generally a metallic return (neutral conductor) is used. Under the assumption that the neutral conductor carries both the current of the positive and negative pole, the currents can be represented by

$$\begin{bmatrix} I_+ \\ I_n \\ I_- \end{bmatrix} = \begin{bmatrix} 1 & 0 \\ -1 & -1 \\ 0 & 1 \end{bmatrix} \begin{bmatrix} I_+ \\ I_- \end{bmatrix}. \tag{16}$$

The assumption in (16) and its inverse can be used to incorporate the neutral conductor quantities into the symmetrical domain. However, in this paper it is suggested to modify the transform to directly include the neutral conductor. The transform matrices then become

$$\boldsymbol{A'} = \boldsymbol{A} \cdot \frac{1}{3} \begin{bmatrix} 2 & -1 & -1 \\ -1 & -1 & 2 \end{bmatrix} = \frac{1}{6} \begin{bmatrix} 1 & -2 & 1 \\ 3 & 0 & -3 \end{bmatrix}, \tag{17}$$

$$\boldsymbol{A'}^{-1} = \begin{bmatrix} 1 & 0 \\ -1 & -1 \\ 0 & 1 \end{bmatrix} \boldsymbol{A}^{-1} = \begin{bmatrix} 1 & 1 \\ -2 & 0 \\ 1 & -1 \end{bmatrix}. \tag{18}$$

Although this modified transformation does directly take neutral conductor into account, and allows for the inclusion of capacitance and conductance to ground, it is based on two major assumptions: it is assumed that the neutral voltage is exactly opposite to twice the unbalanced component voltage, and that the neutral current is exactly opposite to twice the unbalanced component current. This assumption is only valid if the neutral conductor is symmetrical with both pole conductors. However, this is not the case if there are any asymmetries (including ground faults) in the system.

Therefore, it is proposed to view the bipolar dc distribution system as a 3 vector system and accordingly decompose it into 3 symmetrical components instead of 2. The proposed transformation is

$$\begin{bmatrix} X_0 \\ X_1 \\ X_2 \end{bmatrix} = \boldsymbol{T} \begin{bmatrix} X_+ \\ X_n \\ X_- \end{bmatrix}, \tag{19}$$

$$\boldsymbol{T} = \frac{1}{\sqrt{6}} \begin{bmatrix} \sqrt{2} & \sqrt{2} & \sqrt{2} \\ 1 & -2 & 1 \\ \sqrt{3} & 0 & -\sqrt{3} \end{bmatrix}, \tag{20}$$

where X_0, X_1 and X_2 are the bias, unbalanced and balanced symmetrical components of the system respectively.

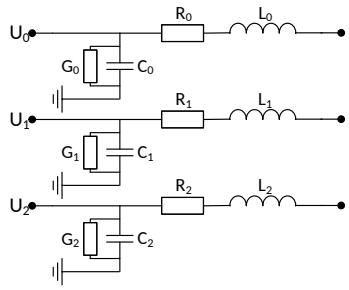

Fig. 5. Equivalent circuit of the symmetric bipolar distribution line model with metallic return in the symmetrical domain

The bias component represents an equal dc offset of the pole and neutral quantities, while the unbalanced and balanced components are the same as previously described. The inverse of this transformation is

$$\begin{bmatrix} X_+ \\ X_n \\ X_- \end{bmatrix} = \boldsymbol{T}^{-1} \begin{bmatrix} X_0 \\ X_1 \\ X_2 \end{bmatrix}, \tag{21}$$

$$\boldsymbol{T}^{-1} = \frac{1}{\sqrt{6}} \begin{bmatrix} \sqrt{2} & 1 & \sqrt{3} \\ \sqrt{2} & -2 & 0 \\ \sqrt{2} & 1 & -\sqrt{3} \end{bmatrix}. \tag{22}$$

Please note the similarities between (17), (18), (20), and (22). The added bias component transformation and the modification of the balanced component transformation are chosen in such a way that if there is asymmetry in the system the symmetrical domain matrices are still symmetrical. Moreover, the transformation is orthogonal and power invariant.

An example of a bipolar distribution line model with a metallic return is given in Fig. 4. The resistance, capacitance, inductance and conductance matrices of this lumped element model are

$$\boldsymbol{R}_\pm = \begin{bmatrix} R_+ & 0 & 0 \\ 0 & R_n & 0 \\ 0 & 0 & R_- \end{bmatrix},$$

$$\boldsymbol{C}_\pm = \begin{bmatrix} \sum\limits_{i=+,n,-} C_{+i} & -C_{+n} & -C_{+-} \\ -C_{+n} & \sum\limits_{i=+,n,-} C_{ni} & -C_{-n} \\ -C_{+-} & -C_{-n} & \sum\limits_{i=+,n,-} C_{-i} \end{bmatrix},$$

$$\boldsymbol{L}_\pm = \begin{bmatrix} L_+ & M_{+n} & M_{+-} \\ M_{+n} & L_n & M_{-n} \\ M_{+-} & M_{-n} & L_- \end{bmatrix},$$

$$\boldsymbol{G}_\pm = \begin{bmatrix} \sum\limits_{i=+,n,-} G_{+i} & -G_{+n} & -G_{+-} \\ -G_{+n} & \sum\limits_{i=+,n,-} G_{ni} & -G_{-n} \\ -G_{+-} & -G_{-n} & \sum\limits_{i=+,n,-} G_{-i} \end{bmatrix}. \tag{23}$$

The system's matrices in the symmetrical domain can be determined analogously to (11) to (14). For example the series resistance matrix in the symmetrical domain is determined by

$$\boldsymbol{R}_{012} = \boldsymbol{T}\boldsymbol{R}_\pm\boldsymbol{T}^{-1}, \tag{24}$$

where the subscript 012 indicates the symmetrical domain and the $\pm$ subscript still indicates the (original) pole domain.

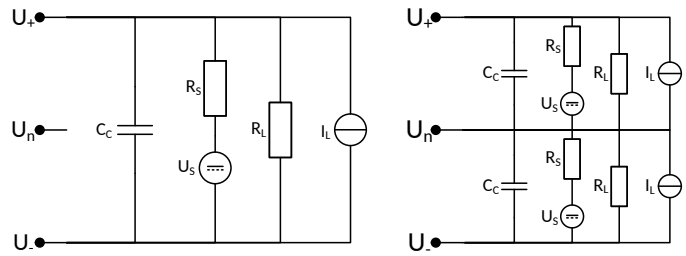

Fig. 6. Equivalent circuits of the node behavior in the original pole domain

Consequently, the system's matrices in the symmetrical domain, in the case the distribution lines are symmetrical, are

$$\boldsymbol{R}_{012} = \begin{bmatrix} R_+ & 0 & 0 \\ 0 & R_+ & 0 \\ 0 & 0 & R_+ \end{bmatrix},$$

$$\boldsymbol{L}_{012} = \begin{bmatrix} L_+ + 2M_{+n} & 0 & 0 \\ 0 & L_+ - M_{+n} & 0 \\ 0 & 0 & L_+ - M_{+n} \end{bmatrix},$$

$$\boldsymbol{C}_{012} = \begin{bmatrix} C_+ & 0 & 0 \\ 0 & C_+ + 3C_{+n} & 0 \\ 0 & 0 & C_+ + C_{+n} + 2C_{+-} \end{bmatrix},$$

$$\boldsymbol{G}_{012} = \begin{bmatrix} G_+ & 0 & 0 \\ 0 & G_+ + 3G_{+n} & 0 \\ 0 & 0 & G_+ + G_{+n} + 2G_{+-} \end{bmatrix}. \tag{25}$$

From these matrices it can be seen that the bias, unbalanced and balanced components are again fully independent. Additionally, it can be noted that this transform exhibits similarities to the symmetrical decomposition of symmetrical 3 phase ac distribution lines. The equivalent circuits in the symmetrical domain, in case the transmission lines are symmetrical, can be derived from (25) and are shown in Fig. 5.

C. Discussion

It can be concluded that the (dynamic) analysis of dc distribution systems can be significantly simplified by using the symmetrical component decomposition method. If a balanced system is analyzed only the balanced component has to be investigated compared to the positive, neutral and negative components in the original pole domain. For simulations this means a reduction of the degrees of freedom by two thirds. Similarly, for unbalanced systems only the balanced and unbalanced component have to be investigated. Moreover, the system matrices are sparse further simplifying computation for unbalanced systems.

Other interesting applications of the symmetrical component decomposition method can be found in protection and control. For protection, a circuit breaker only needs to determine the bias component of the network. Since the bias component indicates current circulating through ground, a sudden change in the bias component indicates the occurrence of a fault. Furthermore, the unbalanced component can be used by balancing converters to control the voltage unbalance in a grid [18], [20].

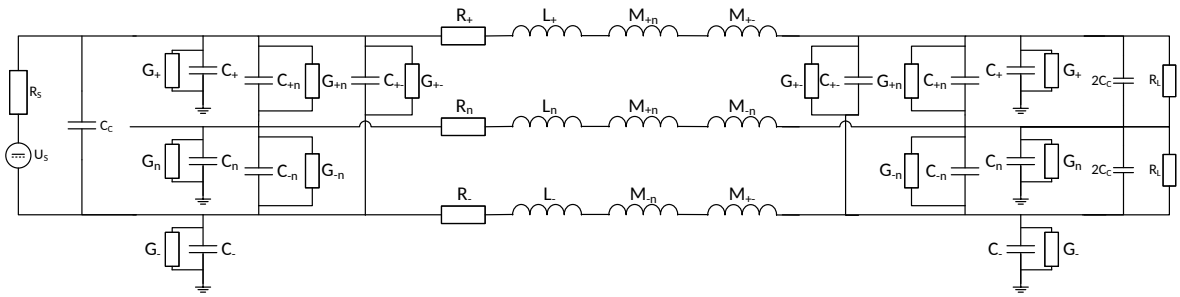

Fig. 7. Original pole domain equivalent circuit of the example bipolar dc system used to demonstrate the dynamic analysis

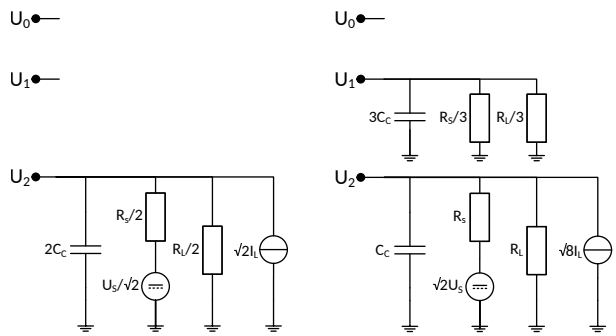

Fig. 8. Equivalent circuits of the node behavior in the symmetrical domain

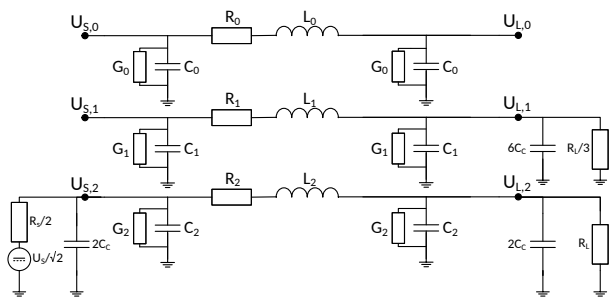

Fig. 9. Symmetrical domain equivalent circuit of the example bipolar dc system

D. Sources and Loads in the Symmetrical Domain

The behavior of most nodes (loads and sources) in dc distribution systems can be modelled as a combination of an output capacitance, a voltage source with a (virtual) series resistance, and current source with a (virtual) shunt resistance. This is illustrated in Fig. 6.

To find the equivalent circuits in the symmetrical domain (19) to (22) and the previously derived transformation method illustrated in (24) are used. The equivalent circuits in the symmetrical domain are shown in Fig. 8.

IV. Dynamic Analysis in the Symmetrical Domain

To explore the capabilities of the presented symmetrical component decomposition method a change in load and a single line-to-ground fault in a simple example system are investigated. A two terminal symmetrical bipolar dc network transferring power between one source converter and one load converter is considered. The source converter is assumed to be droop controlled, while the load behaves as a (virtual) resistance. Furthermore, the distribution line is modelled similarly to Fig. 4, but in a π-configuration. The equivalent circuit of this configuration is shown in Fig. 7.

The equivalent circuit of this system in the symmetrical domain is shown in Fig. 9. The subscripts S and F represent the source and load side respectively. In this example the source converter is balanced and therefore its equivalent circuit only appears in the balanced component circuit. Consequently, the bias and unbalanced components of the voltages and currents are expected to be 0 A before the 5 Ω ground fault is induced in the positive pole of the load.

TABLE I
POLE DOMAIN PARAMETERS FOR THE DYNAMIC ANALYSIS

Distribution Line	R_+ [Ω]	L_+ $[mH]$	C_+ $[\mu F]$	G_+ $[mS]$
	5	0.4	0.1	1
Converters	U_S $[V]$	R_S [Ω]	R_L [Ω]	C_C $[\mu F]$
	700	5	50	50

TABLE II
SYMMETRICAL DOMAIN PARAMETERS FOR THE DYNAMIC ANALYSIS

Resistance	R_0 [Ω]	R_1 [Ω]	R_2 [Ω]
	5	5	5
Inductance	L_0 $[mH]$	L_1 $[mH]$	L_2 $[mH]$
	0.48	0.36	0.36
Capacitance	C_0 $[\mu F]$	C_1 $[\mu F]$	C_2 $[\mu F]$
	0.1	0.25	0.25
Conductance	G_0 $[mS]$	G_1 $[mS]$	G_2 $[mS]$
	1	2.5	2.5

The parameters in the pole domain are chosen to be typical values for a 1 km distribution line and 4 kW converters. The relevant pole domain parameters are given in Table I. Furthermore, it is assumed that the distribution line is symmetrical, its mutual capacitance (e.g., C_{+n}) is half of the capacitance to ground (e.g., C_+), and its mutual inductance (e.g., M_{+n}) is a tenth of the self-inductance (e.g., L_+). For the simulations it was chosen not to ground the system to be better able to verify the behavior of the voltages during and after the fault. Additionally, the parameters of the equivalent circuit in the symmetrical domain are given in Table II.

Two separate simulations were executed for the verification

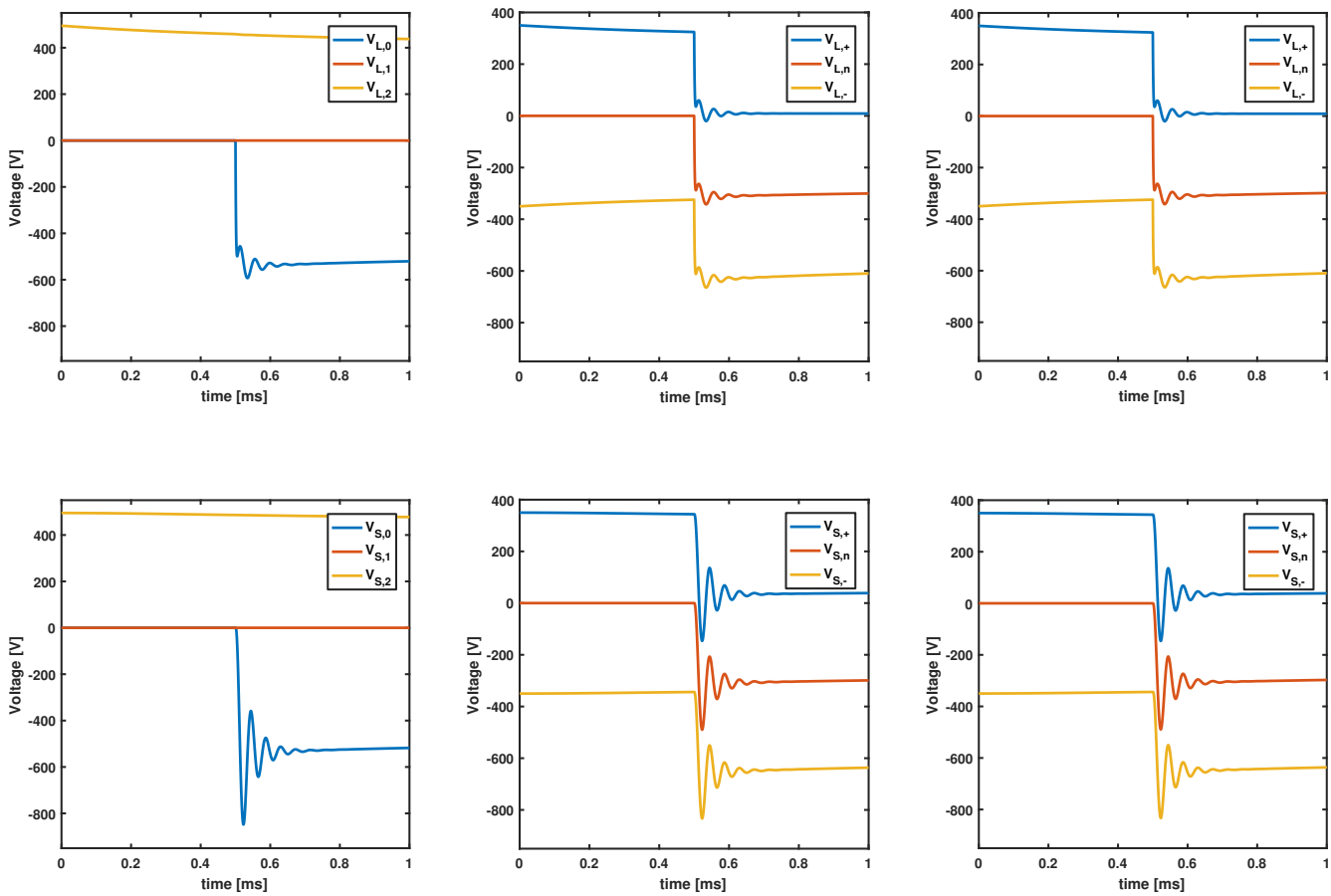

Fig. 10. Voltages at the load (top) and source (bottom) obtained from the symmetrical domain model (left, middle) and from a pole domain model (right)

of the symmetrical domain models. Firstly, the system was simulated in the pole domain using a state-space model. Secondly, the fault was simulated using the symmetrical domain equivalent circuit shown in Fig. 9. The two simulations are compared by using the inverse transform on the obtained symmetrical domain quantities. The results of the simulations are shown in Fig. 10.

This figure shows that the results from both models are identical. Furthermore, three observations can be done to further verify the validity of the models. Firstly, the voltage of the positive pole drops to 0 V as is expected. Secondly, it is seen that in this system the capacitance added by the converters is dominant as the voltage between the poles remains almost constant. Lastly, it is seen that the neutral voltage does not drop to the exact positive pole voltage before the fault, which is to be expected as the capacitance between the positive pole and the neutral is partially discharged during the fault. It can be concluded that the symmetrical component decomposition method is suitable for the analysis of dc distribution systems.

V. Analysis of (A)symmetrical Faults

The previous section showed how the symmetrical component decomposition method can be used for the dynamic analysis of a bipolar dc distribution grid. Analogously to ac systems, the symmetrical component decomposition can also be employed to calculate the steady state fault currents of various (a)symmetrical faults.

In the example of the previous section a ground fault was induced in the positive pole. From Fig. 7 it can be seen that the calculation of the fault current is complex as there are many couplings between the positive pole and the other conductors. This section presents an alternative method for determining the steady state fault currents by creating Thevenin equivalent circuits of the symmetrical components at the fault location.

To arrive at the equivalent circuits in the symmetrical domain several assumptions have to be made. Firstly, it is assumed that the entire system, besides the fault, is symmetrical. Secondly, it is assumed that the superposition principle can be applied. Therefore, the system's currents, other than the fault current, can be neglected during the analysis of the fault. Thirdly, it is assumed that capacitance and inductance can be neglected in steady state. Lastly, Thevenin's theorem is applied, which allows for the replacement of the non-faulted part of the system by an equivalent generator and a series resistance for each symmetrical component (see Fig. 11A).

For several types of faults the circuit in the pole domain, the resulting equations and the equivalent circuit in the symmetrical domain are shown in Fig. 11. For illustrative purposes, the derivation of the pole-to-ground (Fig. 11B), double pole-to-ground (Fig. 11C), and pole-to-pole (Fig. 11D) faults will be given here.

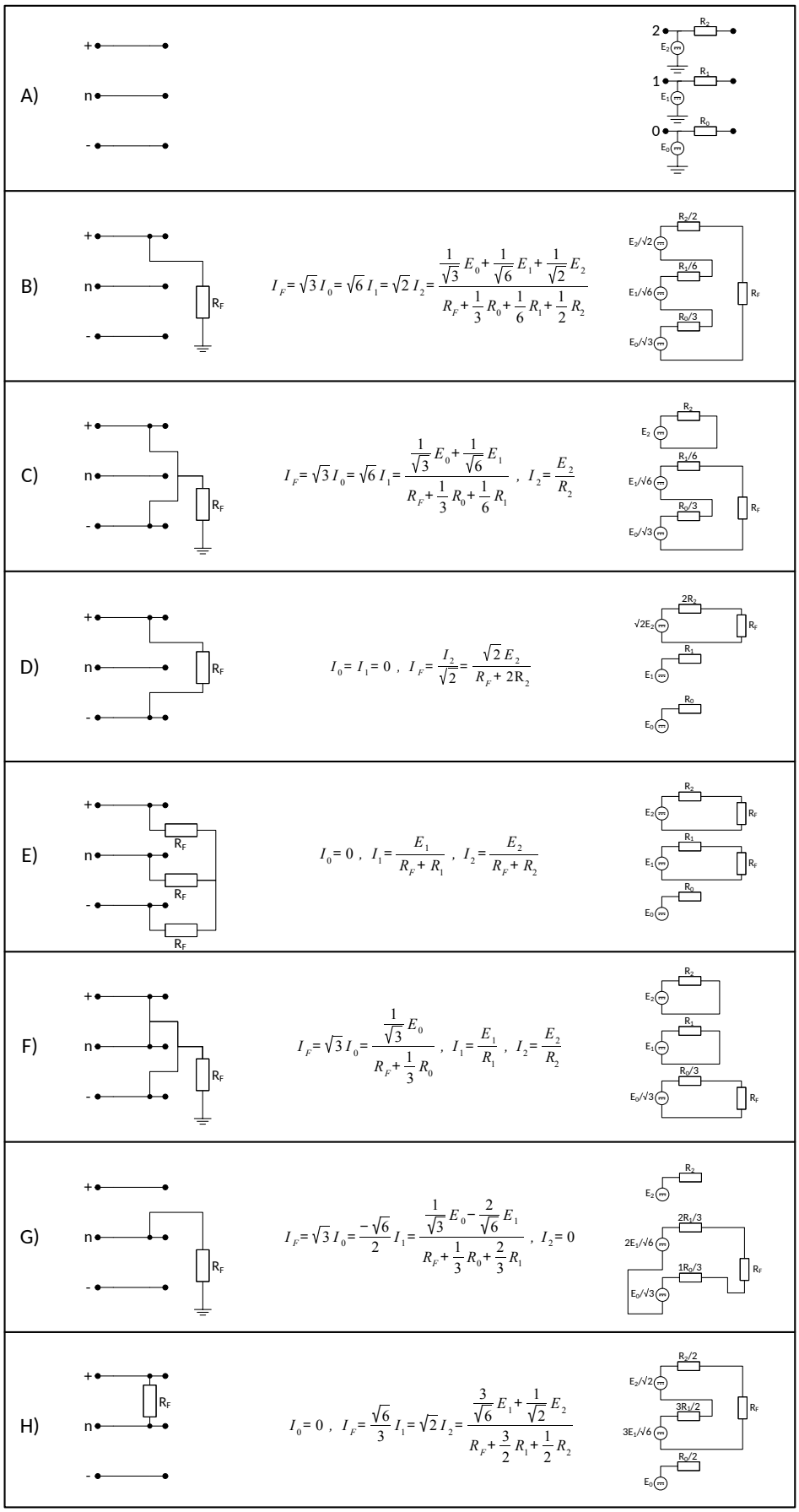

Fig. 11. (A)symmetrical faults, the resulting equations, and their equivalent circuits in the symmetrical domain

First, the pole-to-ground fault is analyzed. It is important to differentiate the voltage at the location of the Thevenin equivalent sources (E) and at the location where the fault occurs (U). Accordingly, during the pole-to-ground fault

$$E'_+ = R'_+ I_+ + U_+ = R'_+ I_+ + R_f I_f, \tag{26}$$

where E'_+ and R'_+ are the Thevenin equivalents in the pole domain, I_f is the fault current and R_f is the fault resistance.

This equation can be solved without knowing the pole domain Thevenin equivalent parameters. Applying the transformations (19) and (21) to (26) results in

$$\frac{E_0}{\sqrt{3}} + \frac{E_1}{\sqrt{6}} + \frac{E_2}{\sqrt{2}} = R_f I_f + \frac{R_0 I_0}{\sqrt{3}} + \frac{R_1 I_1}{\sqrt{6}} + \frac{R_2 I_2}{\sqrt{2}}, \tag{27}$$

where the numbered subscripts denote that the quantities are in the symmetrical domain.

The fault current is equal to the current in the positive pole, while the currents in the neutral and negative pole conductor are 0 A. Therefore, using (19) to transform these currents to the symmetrical domain gives

$$I_f = \sqrt{3} I_0 = \sqrt{6} I_1 = \sqrt{2} I_2. \tag{28}$$

Substituting (28) into (27) yields

$$I_f = \frac{\frac{E_0}{\sqrt{3}} + \frac{E_1}{\sqrt{6}} + \frac{E_2}{\sqrt{2}}}{R_f + \frac{R_0}{3} + \frac{R_1}{6} + \frac{R_2}{2}}. \tag{29}$$

The equivalent circuit in the symmetrical domain is shown in Fig. 11B.

For the double pole-to-ground fault (27) still holds. However, now the fault current is the addition of both the pole currents. Moreover, since the voltages of the positive and negative pole at the fault location are equal ($U_- = U_+$) the bias component voltage U_2 is 0 V. The currents in the symmetrical domain and the fault current are therefore

$$I_f = \sqrt{3} I_0 = \sqrt{6} I_1, \tag{30}$$

$$I_2 = \frac{E_2}{R_2}. \tag{31}$$

Substituting (30) and (31) into (27) yields

$$I_f = \frac{\frac{E_0}{\sqrt{3}} + \frac{E_1}{\sqrt{6}}}{R_f + \frac{R_0}{3} + \frac{R_1}{6}}. \tag{32}$$

The equivalent circuit in the symmetrical domain is given in Fig. 11C.

For the pole-to-pole fault the current in the positive pole is opposite to the current in the negative pole. Moreover, the voltage equation must be modified to

$$E'_+ - U_+ - I_+ R'_+ = E'_- + I_- R'_-. \tag{33}$$

The current in the positive and negative pole are equal but opposite in sign. Therefore, once again using the transform, the relations between the fault current and the currents in the symmetrical domain are

$$I_0 = I_1 = 0, \tag{34}$$

$$I_2 = \sqrt{2} I_f. \tag{35}$$

Using the symmetrical component transformations from (19) and (21) it can be shown that

$$\frac{E_0}{\sqrt{3}} + \frac{E_1}{\sqrt{6}} + \frac{E_2}{\sqrt{2}} - R_f I_f - \frac{R_2 I_2}{\sqrt{2}} = \frac{E_0}{\sqrt{3}} + \frac{E_1}{\sqrt{6}} - \frac{E_2}{\sqrt{2}} + \frac{R_2 I_2}{\sqrt{2}}. \tag{36}$$

Consequently, using (34), (35) and (36) the fault current is derived to be

$$I_f = \frac{\sqrt{2} E_2}{R_f + 2R_2}. \tag{37}$$

The equivalent circuit in the symmetrical domain is shown in Fig. 11D.

The other faults (depicted in Fig. 11) are derived in an analogous fashion. From the derivations and equivalent circuits it can be seen that the transform can be used for the analysis of faults in a similar fashion to the ac symmetrical component decomposition method.

VI. Conclusions

This paper presented a symmetrical component decomposition method to simplify the analysis of (un)balanced and fault conditions of bipolar dc distribution systems. In contrast with previous research the presented method does not lose the information of the neutral voltage. Consequently, capacitance and conductance to ground can be included in the analysis and ground faults can be analyzed. The presented method can be used to reduce the degrees of freedom required for the analysis of balanced and unbalanced dc distribution systems by up to two thirds.

As an example distribution lines, sources and loads were decomposed into their symmetrical components. The decomposition method resulted in three independent components under symmetrical conditions. Furthermore, a dynamic analysis of a simple network was performed to verify the obtained models. The results showed that the symmetrical domain models give results identical to the original pole domain models confirming the validity. Additionally, the equivalent circuits in the symmetrical domain of several (a)symmetrical faults in dc distribution systems were given. This demonstrated the potential of using the symmetrical component decomposition method to analyze faults.

References

[1] A. Ipakchi and F. Albuyeh, "Grid of the future," *IEEE Power and Energy Magazine*, vol. 7, no. 2, pp. 52–62, 2009.

[2] J. W. Coltman, "The transformer [historical overview]," *IEEE Industry Applications Magazine*, vol. 8, no. 1, pp. 8–15, 2002.

[3] T. McNichol, *AC/DC: The savage tale of the first standards war*. John Wiley & Sons, 2011.

[4] "Smart grid: reinventing the electric power system," IEEE Power and Energy Magazine for Electric Power Professionals, IEEE Power and Energy Society, 2012.

[5] D. M. Larruskain, I. Zamora, O. Abarrategui, and Z. Aginako, "Conversion of AC distribution lines into DC lines to upgrade transmission capacity," *Electric Power Systems Research*, vol. 81, no. 7, pp. 1341–1348, 2011.

[6] L. Mackay, T. G. Hailu, G. C. Mouli, L. Ramirez-Elizondo, J. A. Ferreira, and P. Bauer, "From dc nano- and microgrids towards the universal dc distribution system - a plea to think further into the future," in *2015 IEEE Power Energy Society General Meeting*, 2015, pp. 1–5.

[7] E. Rodriguez-Diaz, M. Savaghebi, J. C. Vasquez, and J. M. Guerrero, "An overview of low voltage dc distribution systems for residential applications," in *2015 IEEE 5th International Conference on Consumer Electronics - Berlin (ICCE-Berlin)*, 2015, pp. 318–322.

[8] H. Kakigano, Y. Miura, and T. Ise, "Low-voltage bipolar-type dc microgrid for super high quality distribution," *IEEE Transactions on Power Electronics*, vol. 25, no. 12, pp. 3066–3075, 2010.

[9] J. J. Justo, F. Mwasilu, J. Lee, and J.-W. Jung, "Ac-microgrids versus dc-microgrids with distributed energy resources: A review," *Renewable and Sustainable Energy Reviews*, vol. 24, pp. 387–405, 2013.

[10] A. P. N. Tahim, D. J. Pagano, E. Lenz, and V. Stramosk, "Modeling and stability analysis of islanded dc microgrids under droop control," *IEEE Transactions on Power Electronics*, vol. 30, no. 8, pp. 4597–4607, 2015.

[11] Q. Shafiee, T. Dragicevic, J. C. Vasquez, and J. M. Guerrero, "Modeling, stability analysis and active stabilization of multiple dc-microgrid clusters," in *2014 IEEE International Energy Conference (ENERGYCON)*, 2014, pp. 1284–1290.

[12] S. Anand and B. G. Fernandes, "Reduced-order model and stability analysis of low-voltage dc microgrid," *IEEE Transactions on Industrial Electronics*, vol. 60, no. 11, pp. 5040–5049, 2013.

[13] N. H. van der Blij, L. M. Ramirez-Elizondo, M. T. J. Spaan, and P. Bauer, "A state-space approach to modelling dc distribution systems," *IEEE Transactions on Power Systems*, 2017.

[14] J. Han, Y.-S. Oh, G.-H. Gwon, D.-U. Kim, C.-H. Noh, T.-H. Jung, S.-J. Lee, and C.-H. Kim, "Modeling and analysis of a low-voltage dc distribution system," *Resources*, vol. 4, no. 3, pp. 713–735, 2015.

[15] F. Mura, C. Meyer, and R. W. D. Doncker, "Stability analysis of high-power dc grids," *IEEE Transactions on Industry Applications*, vol. 46, no. 2, pp. 584–592, 2010.

[16] L. van der Sluis, *Transient Analysis of Three-Phase Power Systems*. John Wiley & Sons, Ltd, 2002.

[17] Y. Gu, Y. Chi, Y. Li, W. Sun, W. Li, and X. He, "Dc symmetrical component method for analysis and control of bipolar lvdc grid," in *2015 IEEE Applied Power Electronics Conference and Exposition (APEC)*, 2015, pp. 2802–2807.

[18] Y. Gu, W. Li, and X. He, "Analysis and control of bipolar lvdc grid with dc symmetrical component method," *IEEE Transactions on Power Systems*, vol. 31, no. 1, pp. 685–694, 2016.

[19] C. L. Fortescue, "Method of symmetrical co-ordinates applied to the solution of polyphase networks," *Transactions of the American Institute of Electrical Engineers*, vol. XXXVII, no. 2, pp. 1027–1140, 1918.

[20] G. V. den Broeck, S. D. Breucker, J. Beerten, J. Zwysen, M. D. Vecchia, and J. Driesen, "Analysis of three-level converters with voltage balancing capability in bipolar dc distribution networks," in *IEEE Second International Conference on DC Microgrids (ICDCM)*, 2017, pp. 248–255.

Nils H. van der Blij (S'16) was born in Leiden in the Netherlands, on March 11, 1990. He received his electrical engineering bachelor and master degree from the Delft University of Technology in 2011 and 2013 respectively. His research experience includes Scarabee, Philips, Cambridge University, and Delft University of Technology. His specializations lie in the field of dc distribution grids, electrical machines and drives, and sustainable energy generation. He is currently a PhD candidate working on the management and control of dc distribution grids.

Dr. Laura M. Ramirez-Elizondo (M'06) is assistant professor at the DC Systems, Energy Conversion & Storage group. In 2003, she received her bachelors degree in Electrical Engineering and her bachelors degree in Music with a major in Piano at the Universidad de Costa Rica. She graduated with honors from her M.Sc. studies in Electrical Power Engineering at Delft University of Technology in 2007. She holds a PhD in electrical engineering from the Delft University of Technology (2013).

Dr. Matthijs T. J. Spaan (S'05-M'12) received his doctorate in Computer Science (2006) from the University of Amsterdam. Currently, he is an Associate Professor at Delft University of Technology.

Prof. Dr. Pavol Bauer (SM'07) is currently a full Professor with the Department of Electrical Sustainable Energy of Delft University of Technology and head of DC Systems, Energy Conversion and Storage group. He published over 80 journal and 300 conference papers in his field (with H factor Google scholar 33, Web of science 21), he is an author or co-author of 8 books, holds 4 international patents and organized several tutorials at the international conferences. He has worked on many projects for industry concerning wind and wave energy, power electronic applications for power systems such as Smarttrafo; HVDC systems, projects for smart cities such as PV charging of electric vehicles, PV and storage integration, contactless charging; and he participated in several Leonardo da Vinci and H2020 EU projects as project partner (ELINA, INETELE, E-Pragmatic) and coordinator (PEMCWebLab.com-Edipe, SustEner, Eranet DCMICRO). He is a former chairman of Benelux IEEE Joint Industry Applications Society, Power Electronics and Power Engineering Society chapter, chairman of the Power Electronics and Motion Control (PEMC) council, member of the Executive Committee of European Power Electronics Association (EPE) and also member of international steering committee at numerous conferences.