The Game Between Game Theory and Gaming Simulations Design Choices

Roungas, Bill; Bekius, Femke; Meijer, Sebastiaan

DOI
10.1177/1046878119827625

Publication date
2019

Document Version
Final published version

Published in
Simulation and Gaming

Article

The Game Between Game Theory and Gaming Simulations: Design Choices

Simulation & Gaming
2019, Vol. 50(2) 180–201

Article reuse guidelines:
sagepub.com/journals-permissions
DOI: 10.1177/1046878119827625
journals.sagepub.com/home/sag

Bill Roungas[1,2], Femke Bekius[1], and Sebastiaan Meijer[1,3]

Abstract

Background. The abstraction of complex systems, which is required by default when modelling gaming simulations, is a convoluted and time-consuming process. For gaming simulations to be efficient and effective, the problem of the real system they imitate needs to be narrowed down and simplified as much as possible. Additionally, even after abstraction of the real system, multiple design decisions need to be made and these may differ depending on the gaming simulation.

Aim. This article proposes a framework for formalizing, and consequently standardizing, expediting and simplifying, the modelling of gaming simulations.

Method. The proposed framework applies **game concepts** pertaining to **game theory** in the abstraction of the real system and the **game design decisions**.

Results. Application of the framework in three case studies reveals several advantages of incorporating game theory into game design, such as **formally defining the game design elements** and **identifying the worst-case scenarios in the real-systems**, to name but two.

Conclusions. Given the framework's advantages in general, and the game design recommendations it offers in particular, it is safe to conclude that, for the cases presented in this article, the framework make positive contributions towards the development of gaming simulations.

Keywords
complex adaptive systems, game theory, gaming simulations, serious games

[1]Delft University of Technology, Jaffalaan, The Netherlands
[2]ALBA Graduate Business School, Athens, Greece
[3]KTH Royal Institute of Technology, Stockholm, Sweden

Corresponding Author:
Bill Roungas, Delft University of Technology, Jaffalaan 5, 2628BX Delft, The Netherlands.
Email: v.roungas@tudelft.nl

Introduction

Game theory (GT) and gaming simulations (games) are two terms which, despite their lexical resemblance, are used to describe two seemingly unrelated fields. GT is the study of mathematical models of conflict and cooperation between intelligent rational actors, which results in the definition of Game Concepts (GC) (Bekius & Meijer, 2018; de Bruijn & ten Heuvelhof, 2008; Myerson, 1997; Rasmusen, 2007).

Games are imitations of real-world systems (RS) designed to solve a problem; their primary purpose is not merely to entertain but to educate, train, and steer decision-making processes (Michael & Chen, 2005; Zyda, 2005). In this respect, building a game out of an RS necessitates the use of modelling to reduce actual real-world complexity to a manageable level. The process of modelling and building a game out of an RS is characterized by the following challenges: 1) it can be time consuming, which translates both into delay and cost, 2) it usually requires extensive experience on the part of the designers, as well as concrete knowledge of the system under study, and 3) depending on the actual size of the system, it dictates multiple decision-making, thus increasing the probability that mistakes will be made in the course of the modelling process, especially when the system includes hidden personal agendas and a notion of politics.

Yet since both GT and games aim to describe and interpret the behaviour of actors participating in complex systems (Holland, 1992), there does seem to be an area in which these two converge. The initial hypothesis in this article is that there are more correlations between these concepts than discrepancies, as may be inferred from both their definitions and tautological resemblance. This hypothesis is deemed to be verified by the fact that GT models are used (consciously or unconsciously) by game designers when designing games (Salen & Zimmerman, 2004).

This article intends to improve the modelling of games in two ways. First, GC are used to analyse and abstract the RS, thus pinpointing the problematic areas within this system and its worst-case scenarios. Second, a link is made between GC elements (actors, strategies, issues etc.) and decisions regarding the game components (scenarios, goals etc.). By making such connections, many less relevant game decisions can be filtered out, thus accelerating the modelling and prototyping of games and making the design decisions more rigorous. As a result, the methodology presented can be applied by less experienced game designers.

Background Work

Game Design

While the vast majority of research in games has focused on its educational capabilities, this study is concerned with games for decision-making, as covered by the literature introduced below.

From the early days of games, there have been attempts to define and formalize game design. Duke (1974) proposed the use of conceptual maps combined with

precise documentation of the design process. Such maps have the ability to ensure the games' correspondence with reality, ascertain that the appropriate level of abstraction is being adopted, and to confirm that the corresponding proposals can be implemented in the game design. The framework proposed in this article uses GC in the same way. While a claim cannot be made on whether GC are more effective than conceptual maps, they are selected in this case because they are part of a larger framework.

Harteveld (2011) discussed balancing reality, meaning, and play in game design. For each of these three pillars, he proposed several ways to implement them successfully within a game.

- **Reality**. Incorporating reality into a game is of the utmost importance. Harteveld (2011) proposed achieving this not only through familiarization with the RS under study, but by also enabling discussion with the client and subject matter experts. This in turn will allow accurate identification of the actors and objects involved and enable the building of relationships between them.
- **Meaning**. In the light of the RS it aims to imitate, the game has to have a specific purpose; it should transmit a particular message to the intended audience. The game designer should therefore define its purpose and develop a strategy on how to accomplish this, which in turn requires the implementation of certain game mechanics and feedback mechanisms, as well as reflection through debriefing.
- **Play**. Finally, the development of an engaging, immersive, and aesthetically pleasing game can facilitate its positive reception by participants, and thus improve its outcome.

Harteveld (2011) implicitly utilized GT in several ways, but not fully. The goal of this study is to build upon his work, and more specifically to develop the first pillar of its triadic game design approach, i.e. reality, by explicitly linking game theoretical concepts with game design elements.

Game Theory in Gaming Simulations

With regard to GT approaches in game design, Meijer (2012) commented on the differences between GT and games but went on to conclude that these concepts are often intertwined. He defined game theory as "the mathematical approach of analysing calculated circumstances where a person's success is based upon the choices of others". In games, where the success of one player often depends on the choices made by others, GT hence provides a popular method for modelling artificial intelligence.

Bolton (2002) made a case for the significance of GT in designing role-playing games, especially if these are to be successful at practical forecasting. Moreover, he observed that work to date on GT and role-playing games has dealt with highly simplified versions of the real world. In the same spirit, Ritterfeld, Cody, and Vorderer (2009) asserted that the systematic review process that GT provides could be a valuable heuristic for game designers.

Aligned with Bolton (2002), Salen and Zimmerman (2004) provided two reasons why GT can be useful for game designers. Firstly, GT analyses situations which resemble simple games in a detailed way. Secondly, it focuses on relationships between decisions and outcomes. In effect, the authors thought of actions and outcomes as the building blocks of meaningful play. They therefore believed that applying GT concepts is useful when designing such games. Moreover, they took a step towards proposing concrete ways in which GT can be used to actually help game designers. By looking at games as a series of strategic decisions, they suggested the use of several GT elements, such as:

- decision trees, which allow the linking of different parts of a storyline, i.e., the order of the decisions made by the players;
- utilization functions, which assist in quantifying players' preferences;
- strategies, which can guide the players as they play; and,
- pay-off matrices, which show the relevant outcomes of a game, depending on the players' decisions.

This approach by Salen and Zimmerman (2004) is a promising step towards formal use of GT as a game design tool, but it has a few restrictions.

1) The game has to be turn-based, or, in general, in discrete steps.
2) Players have to make a finite number of clear decisions with knowable outcomes.
3) The game has to be finite; it cannot go on forever.

These restrictions can be quite inhibiting in games with a decision-making purpose, where players do not take turns, the outcome of each decision is barely knowable, and the set of choices from which a decision can be chosen is infinite. In the proposed framework, decisions are not necessarily be linked to specific outcomes, thus freeing the designers to choose whichever they want to include.

Several case studies on the application of GT to game design have also been conducted. One of the most popular is the Beer Game (Sterman, 1989), which has formed the basis for further studies on optimization (Meng, Ye, & Xie, 2010; Thompson & Badizadegan, 2015) and the modelling artificial intelligence (Kimbrough, Wu, & Zhong, 2002). Other less popular games, which have nevertheless incorporated GT in their game design are the approach by Mader, Natkin, and Levieux (2012) to developing a therapeutic game, where GT is used to examine the relationship between therapeutic activities and the players' motivation, and the attempt by Skardi, Afshar, and Solis (2013) to apply cooperative GT to the control of total sediment yield in the watershed, vis-a`-vis landowners conflicting interests.

Further to the above, Guardiola and Natkin (2005) used GT as a tool to model and understand local properties of gameplay by building game matrices for a video game. In effect, though, they were using GT to understand a game rather than to design it.

Finally, Fullerton (2014) proposed the utilisation of GT with various examples but only when the game involves dilemmas.

The literature reviewed in this second part illustrates that GT can contribute significantly to designing games. Nevertheless, research on this topic not only remains limited but also has severe limitations (restrictions, simplified games, etc.) or focuses only on specific games in the form of case studies. Throughout this article, it is explicitly pinpointed wherever the proposed framework contributes in existing work and how it helps overcome limitations in previous research.

A point of criticism on the use of GT is that the method cannot cover the richness of empirical decision-making processes (Bennett, 1987; Binmore, 1987). It simplifies the situation to rational players who can only choose actions from a limited set of prescribed alternatives. When GT is applied directly to game design/science, the result is a game which scope is too narrow (Klabbers, 2018). Forcing the entire process into one game concept results in an oversimplification of the situation that is not useful for the decision-maker or game designer when applying it to real-world cases. In order to mitigate the possible simplification we use multiple GC to characterize the process. The approach presented in this article is different from more general game theory applications since the concepts used are able to cover rich policy situations and give nuance to different incentives of different actors.

As a conclusion to the literature review, one may identify the absence of a framework for formalizing scientifically the application of GT on the whole spectrum of games. In the next section, the framework introduced aims at tackling this issue.

Proposed Framework

This section proposes a framework for modelling RS through GT and for linking GC and game. The hypothesis tested in this respect is that the development of a game out of an RS – which undoubtedly translates into several design decisions and multiple individual game components – by default requires abstraction of the RS. As such, there is a need for a modelling framework able to guide the designer towards a game, which is an accurate representation of the system it simulates and is also feasible to build and maintain.

The proposed framework consists of: i) a methodology for abstracting the RS and describing it through one or more GC; and ii) a list of GC elements and, linked to it, the corresponding list of game design decisions. Establishment of the links is attempted through the use of the characteristics of the GC (actors, strategies, issues, etc.) and the different game design decisions (scenarios, goals, etc.).

The framework is depicted in Figure 1 and contains five blocks:

- The Real System (RS) represents the system under study. The RS contains actors operating in and on the system, as well as dynamics created by the interaction between the system and the actors. Depending on its complexity, the system can be characterized as either a complex adaptive system or a socio-technical system.

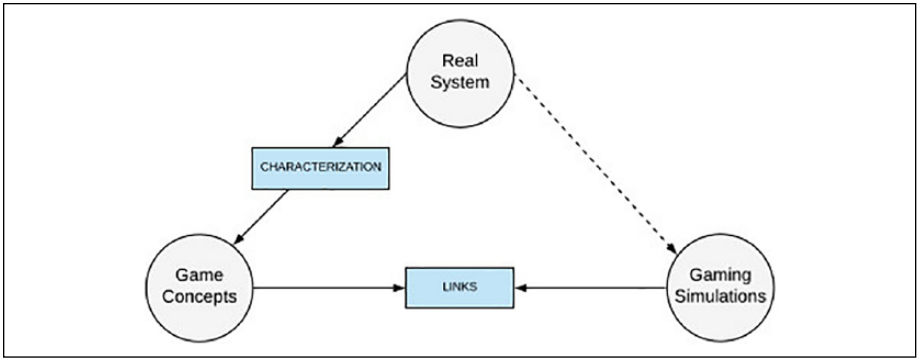

Figure 1. Framework for characterizing the Real System and linking the Game Concepts to game design decisions.

- The Game Concepts (GC) contains characteristics from the toolbox called Game Theory (Osborne & Rubinstein, 1994) representing the game elements of the RS under study. GC describe the interaction between and behaviour of actors who have to make a decision (Bekius & Meijer, 2018). Some game concepts are mathematically defined, such as the well-known Prisoners Dilemma (Rasmusen, 2007), while others have only been observed empirically, for example the Multi-Issue game (de Bruijn & ten Heuvelhof, 2008). Therefore, the characteristics of the GC vary between being empirically substantiated and mathematically proven.
- The Gaming Simulations (games) represents the game design decisions used in modelling the RS, after taking into account the complexity of the system the game is being designed for.
- The CHARACTERIZATION of RS into GC is the first step in the methodological process. The resulting GC should enable identification of the problematic areas and worst-case scenarios within the system, thus answering the second research question.
- The LINKS between GC and games is the second step in the methodological process and subsequently answers the first research question. This is the part that is more directly connected with Harteveld (2011) and with his triadic game design, since it is the one that eventually leads to game design recommendations.

The dashed arrow represents the game design literature as of to date, thus making even more explicit the contributions of this article. The direct link from the RS to the game shows that game design is usually based on the experience of game designers and rarely based on formal methods.

The following section elaborates on how the proposed framework was developed and validated. Particular attention is given on the two capitalised blocks of the framework, the CHARACTERIZATION and the LINKS.

4. Methodology

This section describes the methodology for developing and validating the proposed framework. That is in two parts, each corresponding with one of the rectangles in Figure 1.

- the CHARACTERIZATION of RS into GC.
- the LINKS between GC and games.

Three organizations are involved in the case studies discussed in this article, two from the Netherlands and one from Sweden. In the Netherlands, the organisations are ProRail and NS; ProRail is the government agency responsible for maintaining the national railway network infrastructure, allocating rail capacity and traffic control, whereas NS (Nederlandse Spoorwegen), also known as Dutch Railways, is the principal passenger train operator. In Sweden, the organisation is the Stockholm County Council (Stockholms Läns Landsting, SLL), which is a regional government responsible for all healthcare provision in greater Stockholm.

In Subsection 4.1 and Subsection 4.2, an analysis of these two sections is provided. While in Figure 2, the complete methodology of the article is depicted in a graph. The white background indicates artefacts observed either in the real world or in literature; the grey background indicates games or game-related projects used throughout the methodology; the cyan background indicates artefacts related to the framework; the involved organisations in each case are shown in parenthesis.

Characterization

GT models describe interactions between actors, who make decisions in order to reach a certain outcome. They can formalize the mechanisms and patterns actors perform in RS and thus be used to characterize these systems (Goeree & Holt, 1999; Helbing, 1994; Helbing & Balietti, 2011; Moss, 2001; Vollmer, 2013). Since several examples of such GT characterizations exist, choosing the right mechanism for the situation at hand is crucial, yet not always evident (Barreteau, Le Page, & Perez, 2007; Feld, 1997).

Bekius and Meijer (2018) present a taxonomy of GT concepts (GC). These originate from both formal GT and public administration, in order for these concepts to have a richer and more descriptive definition. The characteristics of GC therefore vary between being empirically substantiated and mathematically proven.

The criteria used to design the taxonomy, which originate from theory on complex real-world decision-making processes (Koppenjan & Klijn, 2004; Teisman & Klijn, 2008), are important for selecting the *right* GC. Multiple actors are usually involved in these processes, forming a network of interdependencies., And hierarchical relations can exist within those networks, most frequently between two actors.

The aim of the process is to reach a collective decision. However, individual strategic behaviour plays an important role as well. Moreover, the decision-making process

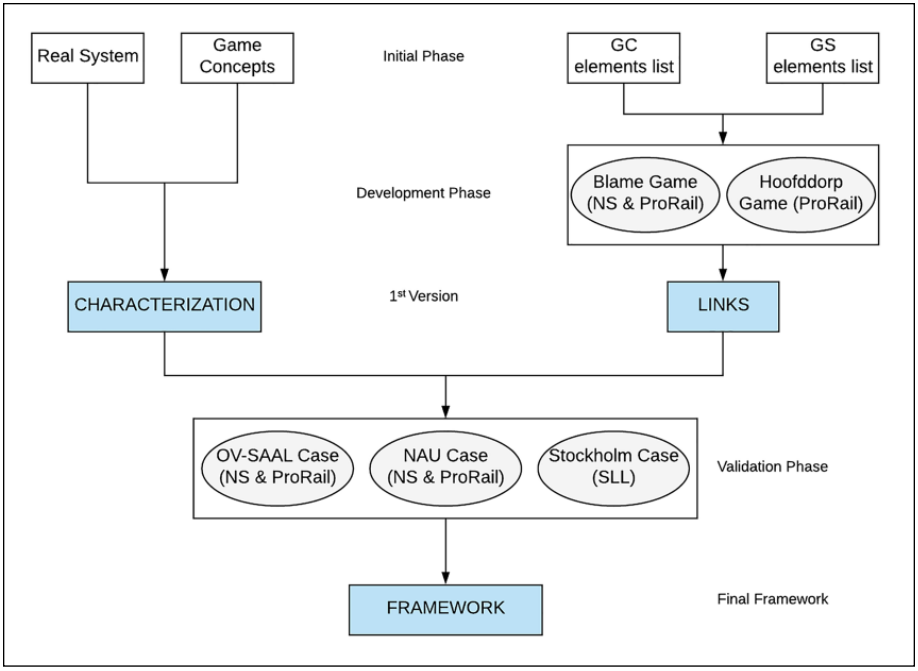

Figure 2. Methodology for the development and validation of the proposed framework.

is dynamic. Therefore, the set of GC chosen from the taxonomy should, and does, cover a wide range of situations appearing in RS. A more detailed explanation of GC selection can be found in Bekius and Meijer (2018), while a comparison of this approach with other characterization methods or decision-making tools can be found in Bekius, Meijer, and de Bruijn (2018).

With regard to games, the GT notions help us to analyse the situation and to *predict* worst-case scenarios. Since we obviously want to avoid such scenarios if at all possible, the ability to identify them in advance can be particularly helpful when making game design decisions.

Links

Two lists of GC characteristics and game design decisions are compiled in order to identify the elements linking GT and games. The compositions of these lists are based on literature. From a theoretical point of view, these two lists begin from a different start point, i.e. GT and game design, with the aim to be linked using two games. The two games are analysed in order to formulate an initial assumption regarding the links. For each of these games, the content of each element included in the corresponding GC and game design lists is identified. On this basis, elements from the two lists are then linked.

For the GC characteristics, a list of 16 GC elements (de Bruijn & ten Heuvelhof, 2008; Osborne & Rubinstein, 1994; Rasmusen, 2007) is used as a starting point. Overlaps between some of these elements necessitated the conduct of new research, which eventually introduced new elements. The resulting list of GC elements incorporated these, as well as merged versions of some of the original overlapping elements. The refined list is shown in the first column of Table 1.

For the game design decisions, additional literature is used in order to adapt and enhance the list of game elements for educational games, compiled by Roungas and Dalpiaz (2016), so as to fit in games with any purpose. The corresponding list of game design elements is shown in the second column of Table 1.

Two problems arise by creating these two lists.

1. The lists do not contain completely independent elements.
2. 1-to-1 correspondence between GC characteristics and game design decisions is not always applicable.

Problem 1 can be addressed by merging elements which appear within the same list. If one element is dependent or subordinate to another, it follows that the two can be merged. With regard to problem 2, 1-to-n, n-to-1 or no linking may be used as well.

The games. To verify the proposed methodology, two games were used. Both are related to the railway sector. They have been called the Hoofddorp Game and the Blame Game. Interviews were conducted with the designer of each, asking specific questions in order to gain an insight into their design decisions and to retrieve the requisite information needed to identify the GC characteristics. Subsequent to each interview and establishment of its results, the substance of each element of the GC and game lists was ascertained independently. In other words, one researcher identified the GC characteristics and another the game design decisions. In this way, the probability of bias in creating the links was minimized. As described above, moreover, elements were merged when one was dependent on or subordinate to another. Such merges were effected only for elements appearing on the same list.

The Hoofddorp Game is a board game with a low fidelity level, which tests changes affecting the railway infrastructure in and around Hoofddorp station. Hoofddorp itself is a small town between Amsterdam and Leiden, but in the Dutch national railway network it is strategically situated close to the country's largest airport, Schiphol, on the main line linking it to some of the Netherlands' biggest cities, like The Hague and Rotterdam. Any changes affecting the infrastructure at Hoofddorp can thus have a severe impact on the connection between these cities and the airport.

The game has two different scenarios:

1. What happens if a fire breaks out in the railway tunnel under Schiphol Airport?
2. What happens in the event of disruption on the line to Leiden?

Table 1. Links Between GC Characteristics and Game Design Decisions Found by Analysing the Hoofddorp Game and the Blame Game.

GC	Games	Comments
Actors	Characters	Both contain the same people, since clients and facilitator(s) are included as Characters.
Actions	Rules Challenges Tasks	Rules, Challenges and Tasks are not completely independent and all have overlaps with the Action Set from game theory.
Strategies	Challenges Motivation	Strategies are about the how (Challenges) but also about the why (Motivation).
Pay-offs	Motivation Rewards	Pay-Offs are the sum of explicit (e.g. money) and implicit (e.g. satisfaction) rewards.
Information Set	Feedback	The Information Set is influenced by many game elements, but we only link it with elements from the two lists when they match content-wise. Feedback is specifically included.
Context	Scenario Fidelity Level Type of Game	The definitions and content of Context and Scenario match almost exactly. Context can define the Fidelity Level and Type of Game.
Issues	Challenges Pitfalls	Only for those issues which correspond with the content of the game, not those related to its design. Pitfalls is a new element covering issues related to the game design.
Outcome	Goals Debriefing Purpose	Outcome is linked with Goals due to their similar definitions and with Debriefing due to the fact that that aims to optimize the outcome of the game. Purpose is a new element indicating the function the game is designed for.
Iterative Game	Repetition	Due to similar definitions

References: (Alessi, 1988; Apperley, 2006; Barreteau, Le Page, & Perez, 2007; Bekius, de Bruijn, Cunningham, & Meijer, 2016; de Bruijn & ten Heuvelhof, 2008; Rasmusen, 2007; Roungas & Dalpiaz, 2016)

The output of the game has been used as input to help decide whether changes to the infrastructure at Hoofddorp are necessary or, alternatively, a whole new plan should be compiled.

The Blame Game is a role-playing game with a high fidelity level, which simulates a situation where two groups are "blaming" each other for incorrect planning. Subsequently, each player writes a report in which they nominate one or more members of the opposing group for dismissal.

The game has two scenarios.

1. In 2016 a decision was made to modify part of the railway infrastructure. But now, in 2018, the resulting performance has proven disappointing and passengers face frequent delays.

2. In 2016 it was decided that it would not be beneficial to make any changes to the infrastructure. But now, in 2018, performance is disappointing and passengers face frequent delays.

This game has been used to raise awareness amongst strategic decision-makers of the interdependencies within the system and of the importance of team play.

The final links. Actors (GC) have a 1-1 link with Characters (Games), because the latter are a subset of the former in the sense that they include the participants in the game, the client and the facilitator(s), all of whom are included as Actors (GC) along with the game designer(s).

The Action Set (GC) has a 1-n link with Rules, Challenges and Tasks (Games). The Action Set is defined by what participants need to accomplish in the game (Tasks), which in turn heavily influences the way they pursue their objectives (Challenges) based on the applicable restrictions (Rules). The only exception to the above are games like the Blame Game, which can be described as open games with minimal or no predefined rules. In these cases, the Action Set has a 1-n link with Challenges and Tasks (Games) only.

Strategies (GC) have a 1-n link with Challenges and Motivation (Games), because Strategies (GC) are about how a specific action from the Action Set (GC) is chosen (Challenges) and why (Motivation).

Pay-Offs (GC) have a 1-n link with Motivation and Rewards (Games) because, being the utility an actor receives, Pay-Offs (GC) can also generally be described as the sum of implicit (e.g. satisfaction) and explicit (e.g. money) rewards.

The Information Set (GC) has a 1-1 link with Feedback (Games) because the latter produces information about past (reaction to an action) and future (knowledge that can be used in the future) actions.

Context (GC) has a 1-n link with Scenario, Fidelity Level and Type of Game (Games). The definitions and content of Context (GC) and Scenario (Games) are almost identical, since both refer to the general situation surrounding the game. In addition, Context (GC) can determine Fidelity Level (Games) – low, medium or high – as well as the Type of Game (Games).

Issues (GC) have a 1-1 link with Challenges (Games), but only in the case of those issues which relate to the content of the game – not for the issues which relate to its design. Although Challenges (Games) seem to be the best match to Issues (GC), given the current list of game design elements it would be more appropriate to introduce a new game element including information pertaining to issues related to the game design. We have therefore introduced the term Pitfalls (Games), which is defined as any problems or mistakes occurring during the process of designing a game.

Outcome (GC) has a 1-n link with Goals and Debriefing (Games), due to its similar definition to Goals (Games) and the fact that Debriefing (Games) aims at optimizing the outcome of the game. Although Goals and Debriefing (Games) appear to be almost a full match with Outcomes (GC), there seems to be a gap regarding the purpose this outcome is used for; in other words, a game design element describing the purpose of the game is missing. Therefore, Purpose (Games) has been introduced as a new game design element defined as the function the game is designed for, e.g. training, decision-making, etc.

Iterative Game (GC) has a 1-1 link with Repetition (Games), because of their very similar definitions. Both terms show whether any, and if so how many, repetitions are needed in order to optimize the outcome of the game.

The methodology proposed is different from that of Salen and Zimmerman (2004), in the sense that it does not directly imply how the order of actions should be or which actions should belong to which outcomes. Instead, it specifies on a more high level the sets of actions or sets of outcomes that belong to certain design choices. Finally, when someone knows which game is "played" and is able to gain insight on the different GT elements, the table can be used as a structure to make your game design choices.

In the next two sections, the proposed framework and the subsequent methodology are validated through two case studies from the Dutch railway sector. A third case study, i.e. the Stockholm case, is used as a way to show (inexperienced) game designers how to use the proposed framework for future game design.

OV-SAAL Case

The so-called OV-SAAL corridor (Schiphol-Amsterdam- Almere-Lelystad public transport) is part of the High-Frequency Rail Programme (Programma Hoogfrequent Spoor), which aims to increase the number of trains operating per hour in the Randstad conurbation. In order to raise capacity in this corridor, several options have been proposed by the various actors involved, two of which are ProRail and NS. One of these options is doubling the tracks around Weesp station.

The Game

The game was paper-based, using real timetables. The participants, playing the role of traffic controllers, were people from ProRail with at least with some experience in the role. The purpose of the game was to test the robustness of five pre-designed infrastructure enhancements in the face of medium-scale disruptions. The game resulted in an expanded set of solutions, which inhibited the participants from reaching a consensus, hence no final decision was made. As a result, the game was negatively received and criticized since it had failed to fulfil its purpose.

Game Concepts

In this case, four GC based on a *game-concept-selection tool* (Bekius & Meijer, 2018) were identified (this same tool was used in all the case studies). Those GC were the Multi-Issue Game, the Cascade Game, the Volunteer's Dilemma and the Battle of the Sexes. The predominant one was the Multi-Issue Game, so that is further analysed below.

Multi-issue game. A Multi-Issue Game is when multiple actors with different incentives form a network of interdependencies and finally reach consensus in a decision-making process that was initially deadlocked. A large number of actors results in multiple issues coming to the table, which intensify and increase as the moment when

a decision needs to be made approaches. Actors have broad agendas, which usually create room for consensus, negotiations, cooperation and participation in the process.

However, too many issues and actors with different ideas about them can result in over-complex situations. And, because of all these issues and actors, the process can be delayed. That was the case with OV-SAAL. During the design and the gameplay phase, the number of issues involved – and hence the number of scenarios (and runs) to be played out – increased. As a result, the complexity of the game did not reflect that of the actual situation. Moreover, major issues which were not supposed to be solved at that particular moment were also introduced, further increasing the complexity and the frustration among participants.

Game Design Recommendations

In the OV-SAAL case, the game could have been significantly improved using the proposed methodology. First, characterization of the problem as Multi-Issue could have been completed within a relatively short time, which in turn would have provided insights into the game design. Then, given the links shown in Table 1, several game design elements could have been better defined.

The game should have included not only participants from the operational layer of the organization but also from management, thus engaging the actual decision-makers with the process. Alternatively, had that not been possible, the challenges and tasks within the game should have been simpler. That is, they should have involved fewer decisions in order to avoid over-complex situations with multiple issues per actor. This could easily have been achieved if Actions and Strategies for the Multi-Issue Game had been explicitly defined. Finally, defining a set of Outcomes for the Multi-Issue Game would have maintained the focus of the game on its initial purpose, thus providing an additional safeguard that the game would deliver valid and meaningful results and so be considered successful by the stakeholders.

Conclusion of the Case

From the above analysis, it is clear how GC can help develop more robust and meaningful games. There are several areas of game design which GC can improve, but the most noticeable is the never-ending struggle of every game designer to create a realistic game while maintaining complexity at a reasonable level. The OV-SAAL case therefore provides a positive step towards validation of the proposed framework.

NAU Case

Utrecht Centraal is the most centrally located and busiest railway station in the Netherlands. It is within an hour by train from Amsterdam, The Hague, Rotterdam, Nijmegen, and Eindhoven. Consequently, disruptions there can affect almost every other major station in the country. The primary purpose of the NAU case was to address

such disruptions and to make Utrecht more resilient (Van den Hoogen & Meijer, 2012). Its secondary purpose was to alleviate the workload of the rail traffic controllers.

The complexity of the situation, which necessitated the use of games, lay in the fact that the operational layer of organizations like ProRail tends to resist implementing decisions made by the managerial layer (strategic decisions), thus increasing the uncertainty of their effectiveness. In this particular case, an additional reason for characterizing the situation as over-complex was the conflicting incentives of the actors involved. ProRail was focused on improving system performance, whereas NS was most keen to reduce the workload of the controllers.

The Game

The game used a paper-based model of the infrastructure, with low-tech interfaces but real timetables. The participants, playing the role of traffic controllers, were from different entities, including ProRail and NS (Van den Hoogen & Meijer, 2012). The purpose of the game was fourfold.

1. To test a pre-designed separation of traffic-control tasks into de-clustered zones of control (Van den Hoogen & Meijer, 2012).
2. To test a different traffic-control concept intended to mitigate second-order delays (Lo, van den Hoogen, & Meijer, 2013).
3. To limit abnormalities during major disruptions.
4. To adjust the division of labour at the traffic control centre (Meijer, 2012).

6.2. Game Concepts

In this case, two GC were identified: the Hub-Spoke and the Battle of the Sexes. Of these, the Hub-Spoke was predominant and so is further analysed below.

Hub-spoke. Multiple actors (the spokes) with different incentives are steered by one actor (the hub) using a command-and-control style. The game creates an incentive to make inflated claims, as the spokes can make agreements amongst themselves and create strategic issues for the hub.

In the NAU case, the strategic level at ProRail is the hub and the different operational departments (including NS and other actors) are the spokes. The former wants to see its decisions implemented, while the latter need to be convinced of the usefulness and necessity of those decisions, which influence their way of working – a highly culturally sensitive factor. If the spokes are unwilling to implement the decisions and able to co-operate with each other, they make life difficult for the hub.

6.3. Game Design Recommendations

In the NAU case, the recommendations defined using the proposed methodology are mostly in line with those resulting from the game itself. This managed to actively

involve both the strategic and the operational levels and to make the latter aware of its necessity and usefulness in creating a more resilient system. The two most important recommendations are as follows.

1. Reduce the number of decisions to be made and thus limit the design space of the game. This recommendation is similar to that resulting from the OV-SAAL case, but differs in the fact that, for NAU, the game designers explicitly limited the number of decisions (Van den Hoogen & Meijer, 2012).
2. Acknowledge the potential conflicts in the incentives driving the different actors. This increases the external validity of the game. Such incentive-based conflicts can occur both between organizations (in this case, between ProRail and NS) within them (in this case, between controllers and managers). Involving all relevant stakeholders in a game raises awareness of those conflicts, which in turn provides a more realistic overview of the situation.

Conclusion of the Case

The NAU case resulted in a proof-of-concept which was later considered largely successful. In retrospect, then, the fact that the recommendations provided in this article were mostly in line with the actual implementation of the game is yet another positive step towards validation of the proposed framework.

Stockholm Case

In Sweden, Stockholm County Council (SLL) is a regional government responsible for all healthcare provision in greater Stockholm. However, home-care services (non-medical decision-making) are provided by local authorities, not SLL. Psychological and social care provision is split between local government and SLL. This makes the institutional environment rigid and not so easy to change.

The demand for healthcare in Stockholm is enormous and rising. The current system faces difficulties in meeting this demand, which makes it vulnerable. A large proportion of the demand comes from older people, who have multiple health issues. One possible solution is the use of sensors to control their well-being at home, thus potentially reducing unnecessary visits to healthcare facilities.

SLL wants to introduce digital innovations in healthcare by conducting tests at local teaching hospitals. Specifically, it wishes to start with three testbeds of 100 elderly people each. They will be supplied with sensors, which will be monitored.

Game Concepts

In this case, three GC were identified: the Volunteer's Dilemma, the Principal-Agent Game and Hub-Spoke. The predominant one was the Principal-Agent Game, so that is further analysed below.

Principal-agent game. *A* Principal-Agent Game describes a hierarchical relationship between a principal and an agent, in which the former is dependent upon the latter because of their expertise in a certain subject. This GC reveals the power position of the subordinate in such a relationship.

In this case, SLL is the principal and the teaching hospitals are the agents. Similarly, a local authority could be seen as the principal and home-care centres as the agents. This immediately reveals the complexity of the decision-making processes, since multiple Principal-Agent Games can take place simultaneously. This analysis focuses on the interaction between SLL and the hospitals.

The knowledge and expertise concerning the digitization of healthcare in general and the introduction of the testbeds, in particular is possessed by the hospitals. SLL is therefore dependent upon them unless it acquires more power.

During the game, the agent makes a decision regarding the test and the principal either accepts or rejects it. The agent's decision is modelled using the variable $\in 0,1$. This is defined as follows:

- y=0 means that the agent is fully objective and not at all influenced by the hierarchical power and expectations of the principal.
- y=1 means that the agent is fully subjective and makes the decision expected by the principal.

Given these two extremes, eight possible outcomes exist. Based on their probability of occurrence, the worst-case scenario can be identified. An overview of Principal-Agent Game is shown in Figure 3.

From SLL's perspective, the worst-case scenario is when it wants the test performed and would thus prefer a "Yes" decision but the hospitals are fully objective and decide "No" (scenario 3 in Figure 3). SLL needs the hospitals to co-operate with it, otherwise it cannot solve the region's healthcare problems. When the worst-case scenario occurs, that damages the relationship between principal and agent, which is not beneficial for either of them.

Game Design Recommendations

Unlike the OV-SAAL and NAU cases, this project is still ongoing and a game has not yet been designed. Therefore, any recommendation provided would not be for research and validation purposes only but could also serve as an actual input for the forthcoming game.

Based on the analysis from the Principal-Agent Game, the worst-case scenario for SLL is when doctors decide not to go ahead with the tests. Of course, if such a decision is based purely on their medical or scientific assessment, then SLL should probably accept it. But if it is based on a lack of knowledge of new technologies and how they work, this is something a game can prevent. Hence, one design recommendation would be to develop a game for doctors focusing especially on the worst-case scenario. In other words, design a game which raises the doctors' awareness of modern sensors, how they work and how they can simplify their everyday job-related activities.

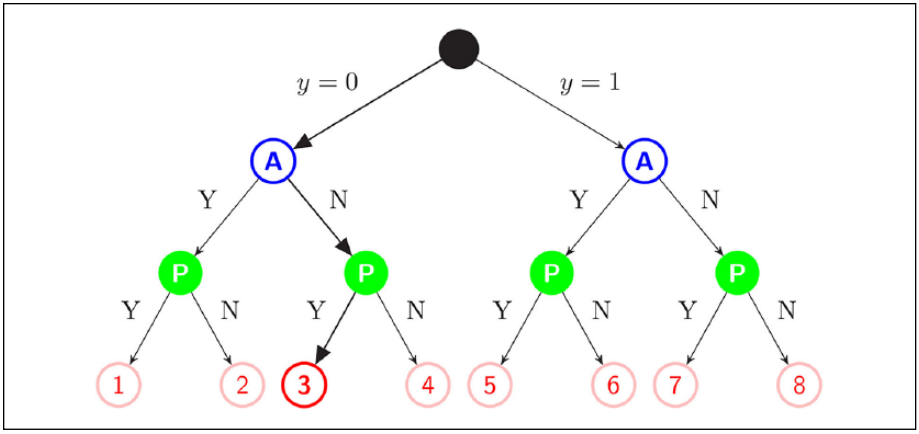

Figure 3.

Conclusion of the Case

The application of GC in this case shows yet another way in which GT can benefit the development of games. GC pinpointed the worst-case scenario in a quick and formal way, whereafter a game can be used to further explore and perhaps prevent it.

Conclusion

This article proposes a framework which contemplates a more efficient and effective modelling of games by formalizing their design decisions using GT concepts. Based on the reviewed literature and to the best of our knowledge, such a framework has never been proposed before. At present, however, it relies heavily on case studies in order to be fine-tuned and validated.

Therefore, with regards to the aspects from the game theoretical analysis that can be translated to game design, the answer lies within a continuum. At one end of this there is the direct translation of GC elements to game design choices (e.g., Actors → Characters, Pay-offs → Rewards, Outcome → Purpose), at the other the purely qualitative information (e.g., Actions, Strategies) which should be entrusted to the game designers, since their interpretation depends heavily not only on the purpose of the game but also on the particular requests made by the client (i.e., the person or company which owns and assigns development of the game).

With regard to the extent to which the design of a meaningful game be determined from the game theoretical analysis, the answer lies in the advantages of the proposed framework.

- The links between GC elements and game design choices, as defined in the previous paragraph.

- Identification of the purpose of the game (the WHAT) by including the context of the decision to be made in the analysis of the situation.
- Identification of worst-case scenarios and problematic areas, as particularly shown in the Section 7.
- Prediction of the possible outcomes of the game. Even when the game does not explicitly steer participants towards a certain outcome and designers want to keep this broad, during the debriefing this could be a way to structure the discussion (e.g., What-if you had chosen A instead of B?).
- Prediction of how a situation characterized by a specific GC can evolve in the future into another GC.

Given these advantages in general, and the game design recommendations in particular, it is safe to conclude that, for the cases presented in this article, a meaningful game can be designed based on the proposed framework.

In addition to answering the two research questions, whether and the extent to which the proposed framework resolves the challenges associated with modelling games, as those were identified in Section 1, should also be addressed. While the introduction of the intermediate step of GT between the RS and games is not trivial, it does enhance the information for designers that can subsequently be part of the game design. For example:

- In the OV-SAAL case, as it was shown, it was difficult even for experienced designers, let alone for inexperienced, to acknowledge how the multiple needs and wants of each actor would significantly increase the complexity of the game and as a result inhibit the final decision making process.
- In the Stockholm case, using a simple tree-like graph (Figure 3), the worst-case scenario was pinpointed relatively quickly. Most probably an experienced game designer would have found the same result but it would have been difficult to do it equally rapidly. Moreover, in this particular case, inexperienced designers would have had a hard time understanding the complexity of the Swedish healthcare system, abstract it and then identify the worst-case scenario.
- The LINKS part of the framework provides a roadmap for translating parts of the RS, through GT, to game design choices. While it can also be helpful for experienced designers as a reference, it is particularly useful for inexperienced designers because it gives them a "dictionary" on how a real world problem can be abstracted and translated into a game.

Finally, it should be noted that the proposed approach overcomes the restrictions imposed by the game theoretical approach of Salen & Zimmerman (2004), i.e. discrete steps, knowable outcomes and finite gameplay.

Limitations

Naturally, the novelty of the proposed framework entails some risks. Moreover, GT as a discipline has also its own limitations. Therefore, acknowledging and either eliminating or mitigating these inhibitors is of paramount importance.

The two lists were constructed based on a literature review in the fields of GT and game design. The use of literature almost entirely eliminates the risk of incorporating incorrect elements in either list, but only mitigates the risk of neglecting to include further relevant elements. With regard to the game design decisions list, the risk of not including important elements is further mitigated by the fact that this list is based mostly upon interviews with game design experts, who were called to comment as to whether an element was missing from the list.

The games used in this analysis have different fidelity levels, serve different purposes and, most importantly, address different professionals. Nonetheless, the first two games (OV-SAAL and NAU), which are the ones used to validate the framework, share one common characteristic: both relate to the railway sector. This represents a risk in respect of the validity of the framework.

While GT offers a vast toolbox for exploring social systems, it also comes with certain restrictions. The most important of these is that GT assumes that actors behave rationally, whereas more often than not social systems tend to behave in a seemingly irrational way. In order to mitigate that risk, the proposed framework does not force designers to choose a rational path for their game design; that is left open. Another significant limitation of GT is that it has only a restricted ability to reveal the reasoning behind certain choices made by actors. It is only during the actual gameplay of the game that their rationale may be revealed.

Future Work

The risk of inadvertently omitting certain GT elements can be mitigated by interviewing GT experts who have experience with complex real-world decision-making and are thus able to pinpoint whether any element has not been incorporated in the framework. Furthermore, additional case studies in fields other than the railways, as well as with games that have different characteristics (in terms of fidelity, purpose, intended audience and perceived success or failure) from the ones used in this article, will add further value to the proposed framework. Finally, game designers should test the framework in a real-world design situation in order for its validity to be further strengthened.

Declaration of Conflicting Interests

The authors declared no potential conflicts of interest with respect to the research, authorship, and/or publication of this article.

Funding

The authors received no financial support for the research, authorship, and/or publication of this article.

References

Alessi, S. M. (1988). Fidelity in the design of instructional simulations. *Journal of Computer-Based Instruction*, *15*(2), 40-47.

Apperley, T. H. (2006). Genre and game studies: Toward a critical approach to video game genres. *Simulation & Gaming*, *37*(1), 6-23. doi:10.1177/1046878105282278

Barreteau, O., Le Page, C., & Perez, P. (2007). Contribution of simulation and gaming to natural resource management issues: An introduction. *Simulation & Gaming*, *38*(2), 185-194. doi:10.1177/1046878107300660

Bekius, F., de Bruijn, H., Cunningham, S. W., & Meijer, S. A. (2016). Structuring the multi-issue and hub-spoke games found in public administration. In *PICMET 2016, Portland International Conference on Management of Engineering and Technology*. Portland, OR: *IEEE*. doi:10.1109/PICMET.2016.7806782

Bekius, F., & Meijer, S. A. (2018). Selecting the right game concept for social simulation of real-world systems. In *14th Social Simulation Conference*. Stockholm, Sweden.

Bekius, F., Meijer, S., & de Bruijn, H. (2018). Collaboration patterns in the Dutch railway sector: Using game concepts to compare different outcomes in a unique development case. *Research in Transportation Economics*, *69*, 360-368. doi:10.1016/j.retrec.2018.06.011

Bennett, P. G. (1987). Beyond game theory –where? In P. G. Bennett (Ed.), *Analysing conflict and its resolution: Some mathematical contributions* (pp. 43-70). Oxford, UK: Clarendon Press.

Binmore, K. G. (1987). Why game theory "doesn't work." In P. G. Bennett (Ed.), *Analysing conflict and its resolution: Some mathematical contributions* (pp. 23-42). Oxford, UK: Clarendon Press.

Bolton, G. E. (2002). Game theory's role in role-playing. *International Journal of Forecasting*, *18*(3), 353-358. doi:10.1016/S0169-2070(02)00027-4

de Bruijn, H., & ten Heuvelhof, E. (2008). *Management in networks: On multi-actor decision making*. London: Routledge.

Duke, R. D. (1974). *Gaming: The future's language*. USA: Sage.

Feld, S. L. (1997). Simulation games in theory development. *Sociological Forum*, *12*(1), 103-115. doi:10.1023/A:1024608707275

Fullerton, T. (2014). *Game design workshop: A playcentric approach to creating innovative games* (2nd ed.). USA: Elsevier.

Goeree, J. K., & Holt, C. A. (1999). Stochastic game theory: For playing games, not just for doing theory. *Proceedings of the National Academy of Sciences, USA*, *96*(19), 10564-10567. doi:10.1073/pnas.96.19.10564

Guardiola, E., & Natkin, S. (2005). Game theory and video game, a new approach of game theory to analyze and conceive game systems. In *CGAMES'05, International Conference on Computer Games* (pp. 166-170). Angoulème, France.

Harteveld, C. (2011). *Triadic game design: Balancing reality, meaning and play*. New York, USA: Springer Publishing Company. doi:10.1007/978-1-84996-157-8

Helbing, D. (1994). A mathematical model for the behavior of individuals in a social field. *The Journal of Mathematical Sociology*, *19*(3), 189-219. doi:10.1080/0022250X.1994.9990143

Helbing, D., & Balietti, S. (2011). From social simulation to integrative system design. *The European Physical Journal Special Topics*, *195*(1), 69-100. doi:10.1140/epjst/e2011-01402-7

Holland, J. H. (1992). Complex adaptive systems. *Daedalus*, *121*(1), 17-30.

Kimbrough, S. O., Wu, D. J., & Zhong, F. (2002). Computers play the beer game: Can artificial agents manage supply chains? *Decision Support Systems*, *33*(3), 323-333. doi:10.1016/S0167-9236(02)00019-2

Klabbers, J. H. G. (2018). On the architecture of game science. *Simulation & Gaming*, *49*(3), 207-245. doi:10.1177/1046878118762534

Koppenjan, J., & Klijn, E.-H. (2004). *Managing uncertainties in networks* (1st ed.). London: Routledge.

Lo, J., van den Hoogen, J., & Meijer, S. (2013). Using gaming simulation experiments to test railway innovations: Implications for validity. In R. Pasupathy, S.-H. Kim, A. Tolk, R. Hill, & M. E. Kuhl (Eds.), *Proceedings of the 2013 Winter Simulation Conference* (pp. 1766-1777). Savannah, GA: *IEEE*. doi:10.1109/WSC.2013.6721557

Mader, S., Natkin, S., & Levieux, G. (2012). How to analyse therapeutic games: The player/game/therapy model. In M. Herrlich, R. Malaka, & M. Masuch (Eds.), *International Conference on Entertainment Computing* (pp. 193-206). Bremen, Germany: Springer Berlin Heidelberg. doi:10.1007/978-3-642-33542-6_17

Meijer, S. A. (2012). Gaming simulations for railways: Lessons learned from modeling six games for the Dutch infrastructure management. In X. Perpinya (Ed.), *Infrastructure design, signaling and security in railway* (pp. 275-294). InTech. doi:10.5772/35864

Meng, R., Ye, Y., & Xie, N. (2010). Multi-objective optimization design methods based on game theory. In *8th World Congress on Intelligent Control and Automation (WCICA)* (pp. 2220-2227). Jinan, China: IEEE. doi:10.1109/WCICA.2010.5554307

Michael, D. R., & Chen, S. L. (2005). *Serious games: Games that educate, train, and inform*. Massachusetts, USA: Thomson Course Technology PTR.

Moss, S. (2001). Game theory: Limitations and an alternative. *Journal of Artificial Societies and Social Simulation*, *4*(2). doi:10.2139/ssrn.262547

Myerson, R. B. (1997). *Game theory: Analysis of conflict*. Massachusetts, USA: Harvard University Press.

Osborne, M. J., & Rubinstein, A. (1994). *A course in game theory*. Massachusetts, USA: The MIT Press.

Rasmusen, E. (2007). *Games and information: An introduction to game theory* (4th ed.). Massachusetts, USA: Blackwell Publishing.

Ritterfeld, U., Cody, M., & Vorderer, P. (2009). *Serious games: Mechanisms and effects*. London: Routledge.

Roungas, B., & Dalpiaz, F. (2016). A model-driven framework for educational game design. In A. De Gloria & R. Veltkamp (Eds.), *GALA 2015 Revised Selected Papers of the 4th International Conference on Games and Learning Alliance* (Vol. 9599, pp. 1-11). Rome, Italy: *Springer International Publishing*. doi:10.1007/978-3-319-40216-1_1

Salen, K., & Zimmerman, E. (2004). *Rules of play: Game design fundamentals*. Massachusetts, USA: The MIT press.

Skardi, M. J. E., Afshar, A., & Solis, S. S. (2013). Simulation-optimization model for non-point source pollution management in watersheds: Application of cooperative game theory. *KSCE Journal of Civil Engineering*, *17*(6), 1232-1240. doi:10.1007/s12205-013-0077-7

Sterman, J. D. (1989). Modeling managerial behavior: Misperceptions of feedback in a dynamic decision making experiment. *Management Science*, *35*(3), 321-339. doi:10.1287/mnsc.35.3.321

Teisman, G. R., & Klijn, E.-H. (2008). Complexity theory and public management. *Public Management Review*, *10*(3), 287-297. doi:10.1080/14719030802002451

Thompson, K. M., & Badizadegan, N. D. (2015). Valuing information in complex systems: An integrated analytical approach to achieve optimal performance in the beer distribution game. *IEEE Access*, *3*, 2677-2686. doi:10.1109/ACCESS.2015.2505730

Van den Hoogen, J., & Meijer, S. A. (2012). Deciding on innovation at a railway network operator: A grounded theory approach. In *CESUN 2012: 3rd International Engineering Systems Symposium*. Delft University of Technology, The Netherlands.

Vollmer, H. (2013). What kind of game is everyday interaction? *Rationality and Society*, *25*(3), 370-404. doi:10.1177/1043463113492307

Zyda, M. (2005). From visual simulation to virtual reality to games. *Computer*, *38*(9), 25-32. doi:10.1109/MC.2005.297

Author Biographies

Bill Roungas is a PhD researcher in the Department of Multi Actor Systems at Delft University of Technology. His research focuses on the design, validation, and knowledge management of simulations and games.

Contact: vroungas@gmail.com

Femke Bekius is a PhD researcher in the Department of Multi-Actor Systems at Delft University of Technology. Her research focuses on the understanding of decision-making in complex adaptive systems using formal methods that originate in game theory and logic, and the application of these methods in real-world settings.

Contact: f.a.bekius@tudelft.nl

Sebastiaan Meijer is professor at KTH Royal Institute of Technology, Department of Health Systems Engineering, and at Delft University of Technology, Faculty of Technology, Policy and Management. He is specialized in gaming simulation and other interactive methods to involve the operational level of organizations in innovation processes.

Contact: sebastiaan.meijer@sth.kth.se