Delft University of Technology

Optical field reconstruction with digital micromirror interferometry

Gong, Hai; Pozzi, Paolo; Soloviev, Oleg; Verhaegen, Michel; Vdovine, Gleb

DOI
10.13140/RG.2.1.2675.8883

Publication date
2015

Document Version
Final published version

Published in
Proceedings the 10th International Workshop on Adaptive Optics for Industry and Medicine 2015

Citation (APA)
Gong, H., Pozzi, P., Soloviev, O., Verhaegen, M., & Vdovine, G. (2015). Optical field reconstruction with digital micromirror interferometry. In S. Bonora (Ed.), *Proceedings the 10th International Workshop on Adaptive Optics for Industry and Medicine 2015* (pp. 1-4). Inst. of Photonics and Nanotechnology-Nat. Res. Council of Italy. https://doi.org/10.13140/RG.2.1.2675.8883

Important note
To cite this publication, please use the final published version (if applicable).
Please check the document version above.

Copyright
Other than for strictly personal use, it is not permitted to download, forward or distribute the text or part of it, without the consent of the author(s) and/or copyright holder(s), unless the work is under an open content license such as Creative Commons.

Takedown policy
Please contact us and provide details if you believe this document breaches copyrights.
We will remove access to the work immediately and investigate your claim.

This work is downloaded from Delft University of Technology.
For technical reasons the number of authors shown on this cover page is limited to a maximum of 10.

Optical field reconstruction with digital micromirror interferometry

Hai Gong*[,1], Paolo Pozzi [1], Oleg Soloviev [1,2], Michel Verhaegen [1] & Gleb Vdovin [1,2,3]

1. DCSC, TU Delft, Mekelweg 2, 2628 CD, Delft, The Netherlands
2. Flexible Optical BV, Polakweg 10-11, 2288 GG Rijswijk, The Netherlands
3. ITMO University, Kronverksky 49, 197101 St Petersburg, Russia

*h.gong@tudelft.nl
g.v.vdovine@tudelft.nl

Abstract: We investigate the possibility of interferometric optical field sensor with DMD forming a series of sampling interferometers in the pupil of an optical system. Our preliminary experiment validates the feasibility of our approach for the field reconstruction in the case of coherent field. We believe that this approach can be extended to sensing of speckle patterns and even incoherent fields, by analyzing not only the intensity and phase, but also the amplitude and the visibility of the interference patterns. Such analysis would yield the complete complex amplitude and/or coherence function, making the approach directly applicable to a wide range of inverse source problems in optics.

Keywords: Digital Micromirror Device (DMD), wavefront sensing

The Digital Micromirror Device (DMD) developed by Texas Instruments has found many applications in scientific imaging, sensing and wavefront control [1,2,3]. A DMD-based wavefront sensor, based on time-multiplexed sampling of the pupil has been reported recently [4].

In this work we investigate the possibility of interferometric optical field sensor with DMD device forming a series of sampling interferometers in the pupil of an optical system.

Each individual mirror of the DLP device has two active stable states. If only two micromirrors of the DMD device are turned on, they form a two-point Young's interferometer, as shown in Fig. 1, with interferometric pattern observed in the focus of the lens. The phase difference between the reflected sample and reference beams, can be directly obtained from the position of the interferometric pattern (see Fig. 2), while the intensity in the sample point can be calculated from the brightness of the interference

pattern. Alternatively, the value of the phase can be obtained from the Fourier transformed interferometric pattern. The phase equals approximately to the argument of the field in the brightest pixel of the first sidelobe - see Fig. 2.

The field in the whole pupil can be reconstructed by measuring the values of phase and intensity, micromirror after micromirror for all sample micromirrors in the pupil, with respect to the fixed reference micromirror.

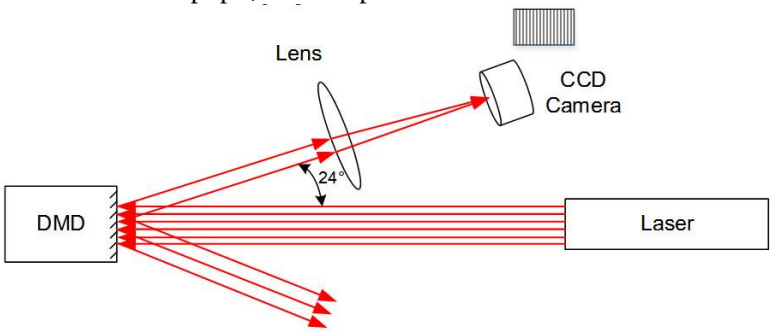

Figure 1. Experimental setup with two active micromirrors of the DMD forming an interferometer producing fringe pattern in the focus of the lens.

The experimental setup includes DLP3000 device with a 684x608 micromirror array positioned in a diamond pattern with diagonal pixel pitch of 10.8 μm . The interference pattern formed by two "on" state micromirrors is formed onto a DCC1545M 8-bit camera with a resolution of 1280x1024 pixels, positioned in the Fourier plane with respect to the DMD device.

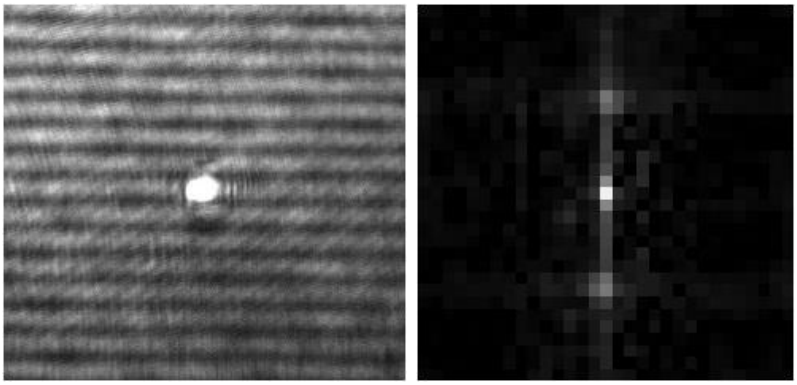

Figure 2. Interferometric pattern formed by a two-micromirror interferometer (left) and its scaled Fourier transform (right). The phase difference between the sample and the reference micromirrors corresponds to the field argument in the brightest pixel in one of the sidelobes.

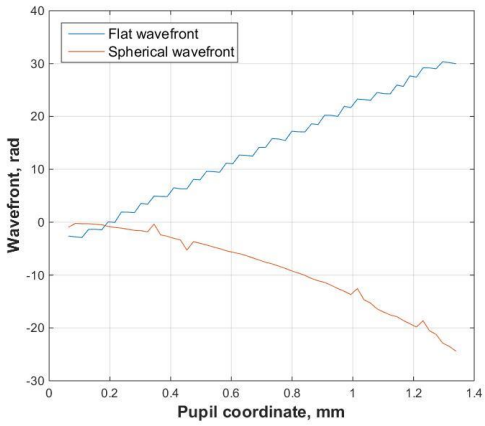

Figure 3. Reconstructed unwrapped phase as a function of pupil coordinate for flat wave- front formed by the initial laser beam, and for the wavefront distorted by a lens placed in the beam in front of the DMD.

In the experiment, the wavefront scanning was performed by fixing the reference micromirror in the “on” state at the position with coordinate (300,300). Then, a series of interferometers has been formed by switching on the second micromirror from the starting point at (300,306), in the vertical direction, with a period of 2 micromirrors, until the beam edge at (300,426) was reached. The phase values, reconstructed along the vertical line are shown in Fig 3. The straight line corresponds to the unaberrated laser beam, with some arbitrary tilt introduced by the slight misalignment of the DMD device. The second (parabolic) curve is obtained with a converging lens placed in the optical path between the DMD and the laser. The systematic modulation of the reconstructed linear phase is explained by the fact that we have adopted approximate method to calculate the phase as an argument of the field in the brightest pixel in the sidelobe. The curve corresponding to the lens phase does not contain such a modulation, as it was calculated as a difference of two absolute measurements – the phase without lens was extracted from the phase obtained with lens, thus cancelling the systematic modulation. A good interpolation procedure is needed to obtain a more precise absolute value of phase. Also, at certain conditions, groups of micromirrors can be used in place of a single micromirror, to increase the light throughput of the device.

The method described possesses many features of a traditional interferometry. However, it has a considerable advantage of not needing any external reference beam, as any micromirror can be used as an “embedded” source of reference. Our preliminary experiment validates the feasibility of our approach for the field reconstruction in the case of a

coherent field. However, we believe this approach can be extended to sensing of speckle patterns and even incoherent fields, by analyzing not only the intensity and phase, but also the amplitude and the visibility of interference patterns. Such analysis would yield the complete complex amplitude and/or coherence function, making the approach directly applicable to a wide range of inverse source problems in optics.

References

[1] D. Dudley, W.M. Duncan, and J. Slaughter. Emerging digital micromirror device (DMD) applications. Micromachining and Microfabrication, January 2003.3

[2] Y. Gong and S. Zhang. Ultrafast 3-d shape measurement with an off-the-shelf DLP projector. Opt. Express, 18(19):19743–19754, September 2010.

[3] D. B. Conkey, A. M. Caravaca-Aguirre, E. Niv and R. Piestun. High-speed phase-control of wavefronts with binary amplitude DMD for light control through dynamic turbid media, 2013.

[4] R. Schmitt, I. Jakobs, and K. Vielhaber. Wavefront sensor design based on a micro-mirror array for a high dynamic range measurement at a high lateral resolution. Springer Berlin Heidelberg, 2009.